This electronic collection of documents is provided for the convenience of the user and is Not a Certified Document –

The documents contained herein were originally issued and sealed by the individuals whose names and license numbers appear on each page, on the dates appearing with their signature on that page.
This file or an individual page shall not be considered a certified document.

Docusign Envelope ID: 500D4102-4BD1-8175-811B-AF137D171DE3

TIP PROJECT: 15BPR.164

CONTRACT: DA00677

STATE OF NORTH CAROLINA
DIVISION OF HIGHWAYS

STATE	STATE PROJECT REFERENCE NO.	SHEET NO.	TOTAL SHEETS
N.C.	– – – –		34

STATE PROJ. NO.	F. A. PROJ. NO.	DESCRIPTION
15BPR.164.1	– –	PE
15BPR.164.3	– –	CON

BEAUFORT COUNTY

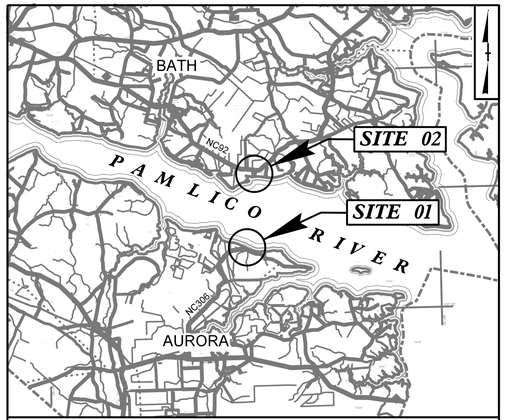

VICINITY MAP

LOCATION: FERRY TERMINAL BRIDGE NO. 060321 ON NC306 AT THE PAMLICO SOUND NEAR AURORA

FERRY TERMINAL BRIDGE NO. 060322 ON NC306 AT THE PAMLICO SOUND NEAR BAYVIEW

TYPE OF WORK: STRUCTURAL, MECHANICAL AND ELECTRICAL REHABILITATION OF EXISTING RAMP STRUCTURES

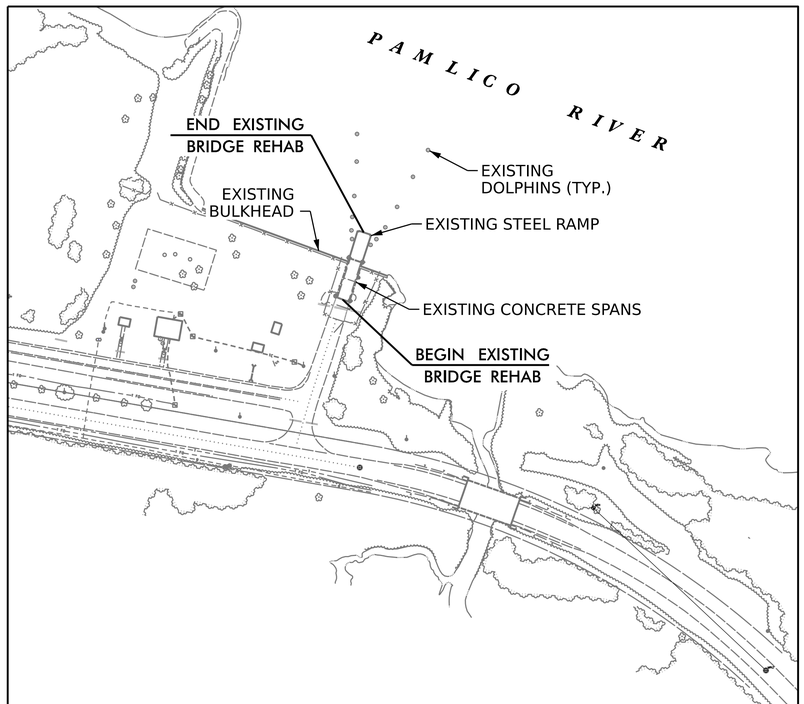

SITE 01 – AURORA TERMINAL

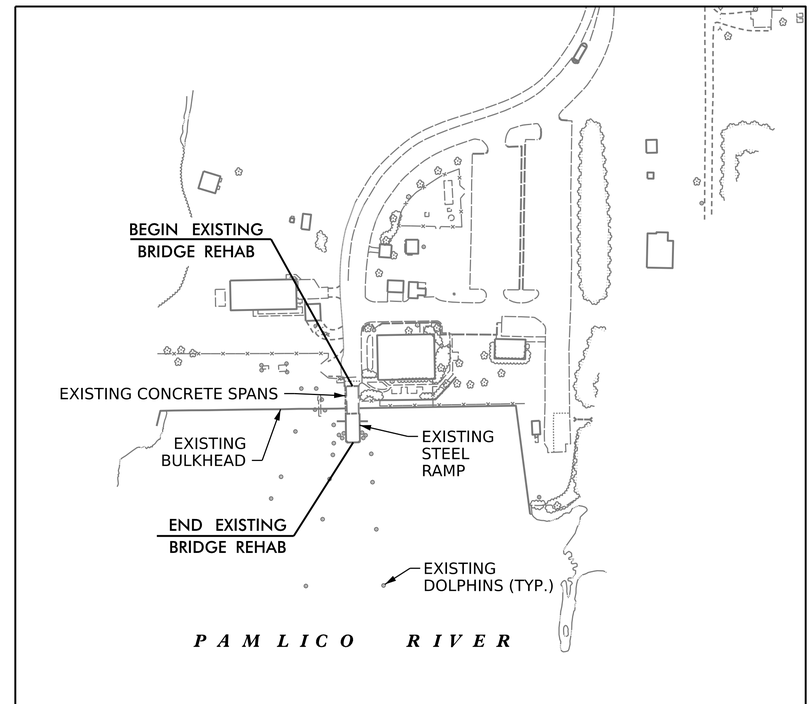

SITE 02 – BAYVIEW TERMINAL

NAD 83/2011

DOCUMENT NOT CONSIDERED FINAL UNLESS ALL SIGNATURES COMPLETED

Prepared in the Office of:
HDR Engineering, Inc. of the Carolinas
555 Fayetteville St, Suite 900 Raleigh, N.C. 27601
N.C.B.E.L.S. License Number: F-0116

2024 STANDARD SPECIFICATIONS

RIGHT OF WAY DATE: —

LETTING DATE: XX/XX/XXXX

DOMENIC A. COLETTI, PE
PROJECT ENGINEER

DAVID J. KNICKERBOCKER, PE
PROJECT DESIGN ENGINEER

DAVID S. STUTTS, PE
NCDOT CONTACT

PROJECT ENGINEER

NORTH CAROLINA PROFESSIONAL SEAL 29589 ENGINEER DOMENIC A. COLETTI

SIGNATURE: 7/16/2026 P.E.

STRUCTURAL DESIGN ENGINEER

NORTH CAROLINA PROFESSIONAL SEAL 045005 ENGINEER DAVID KNICKERBOCKER

DAVID KNICKERBOCKER 7/16/2026 P.E.
SIGNATURE:

STATE OF NORTH CAROLINA DEPARTMENT OF TRANSPORTATION

PLOT DRIVER: $PLTDRV$ DATE: 6/29/2026 PENTABLE: $PENTBL$
USER: $USER$ TIME: 10:25:35 AM
FILE: $PNVARVAULTPATHDESC$

Docusign Envelope ID: 500D4102-4BD1-8175-811B-AF137D171DE3

TIP PROJECT: 15BPR.164

CONTRACT: DA00677

STATE OF NORTH CAROLINA
DIVISION OF HIGHWAYS

STATE	STATE PROJECT REFERENCE NO.	SHEET NO.	TOTAL SHEETS
N.C.	– – – –	G-1	34

STATE PROJ. NO.	F. A. PROJ. NO.	DESCRIPTION
15BPR.164.1	– –	PE
15BPR.164.3	– –	CON

BEAUFORT COUNTY

LOCATION: FERRY TERMINAL BRIDGE NO. 060321 ON NC306
AT THE PAMLICO SOUND NEAR AURORA

FERRY TERMINAL BRIDGE NO. 060322 ON NC306
AT THE PAMLICO SOUND NEAR BAYVIEW

TYPE OF WORK: STRUCTURAL, MECHANICAL AND ELECTRICAL
REHABILITATION OF EXISTING RAMP STRUCTURES

INDEX OF SHEETS

G–1 INDEX OF SHEETS
G1–01 KEY PLAN AND GENERAL NOTES
S1–01 PRESTRESSED CORED SLAB REPAIR DETAILS
S1–02 DOLPHIN FENDER PANEL REPLACEMENT
S1–03 LIFT BENT REPAIR DETAILS
S1–04 STEEL BEAM CRACK REPAIR DETAILS
S1–05 BENT 1 STEEL PILE REPAIR DETAILS
S1–06 BENT 2 STEEL PILE REPAIR DETAILS
S1–07 LIFT BENT STEEL PILE REPAIR DETAILS
S1–08 BENT 2 PILE JACKET REPAIR DETAILS
S1–09 LIFT BENT PILE JACKET REPAIR DETAILS
S1–10 FRP PILE JACKET DETAILS
M1–01 MECHANICAL NOTES
M1–02 HYDRAULIC AND LUBRICATION REPAIRS
E1–01 ELECTRICAL GENERAL NOTES
E1–02 AREA LIGHTING REPAIR DETAILS
E1–03 CONDUIT REPAIR DETAILS
E1–04 JUNCTION BOX REPAIR DETAILS
E1–05 HPU CAPACITOR AND PENDANT REPAIR DETAILS
G2–01 KEY PLAN AND GENERAL NOTES
S2–01 DOLPHIN FENDER PANEL REPLACEMENT DETAILS
S2–02 STEEL BEARING REPAIR DETAILS
S2–03 STEEL BEAM CRACK REPAIR DETAILS
S2–04 LIFT BENT STEEL PILE REPAIR DETAILS
S2–05 BENT 2 PILE JACKET REPAIR DETAILS
S2–06 LIFT BENT PILE JACKET REPAIR DETAILS
S2–07 FRP PILE JACKET DETAILS
M2–01 MECHANICAL NOTES
M2–02 HYDRAULIC AND LUBRICATION REPAIRS
E2–01 ELECTRICAL GENERAL NOTES
E2–02 AREA LIGHTING REPAIR DETAILS
E2–03 CONDUIT REPAIR DETAILS
E2–04 RACEWAY REPAIR DETAILS
E2–05 JUNCTION BOX REPAIR DETAILS
SN STANDARD NOTES

PLOT DRIVER: $PLTDRV$ PENTABLE: $PENTBL$
USER: $USER$ DATE: 6/29/2026 TIME: 10:25:45 AM
FILE: $PWVARVAULTPATHDESC$

Docusign Envelope ID: 500D4102-4BD1-8175-811B-AF137D171DE3

STRUCTURAL NOTES

ALL STRUCTURAL STEEL SHALL BE AASHTO M 270 GRADE 36 OR GRADE 50.

WELD ELECTRODES SHALL BE E70XX.

ALL NEW STRUCTURAL STEEL FASTENERS SHALL BE HIGH STRENGTH BOLTS FURNISHED AND GALVANIZED (PRIOR TO INSTALLATION AND PAINTING) IN ACCORDANCE WITH SECTION 1072-5 OF THE STANDARD SPECIFICATIONS.

NO SEPARATE PAYMENT WILL BE MADE FOR ANY NECESSARY EXCAVATION AS THIS IS CONSIDERED INCIDENTAL TO THE PILE REPAIRS.

FOR COORDINATION WITH FERRY DIVISION, SEE SPECIAL PROVISIONS.

FOR SUBMITTAL OF WORKING DRAWINGS, SEE SPECIAL PROVISIONS.

FOR FALSEWORK AND FORMWORK, SEE SPECIAL PROVISIONS.

FOR CRANE SAFETY, SEE SPECIAL PROVISIONS.

FOR GROUT OF STRUCTURES, SEE SPECIAL PROVISIONS.

FOR SECURING OF VESSELS, SEE SPECIAL PROVISIONS.

FOR PILE JACKETS, SEE SPECIAL PROVISIONS.

FOR WORK IN, OVER OR ADJACENT TO NAVIGABLE WATERS, SEE SPECIAL PROVISIONS.

FOR DOLPHIN FENDERS, SEE SPECIAL PROVISIONS.

FOR STEEL REPAIRS, SEE SPECIAL PROVISIONS.

FOR STEEL BEAM CRACK REPAIRS, SEE SPECIAL PROVISIONS.

FOR STEEL PILE REPAIRS, SEE SPECIAL PROVISIONS.

FOR STEEL BEARING REPAIRS, SEE SPECIAL PROVISIONS.

FOR CONCRETE REPAIRS, SEE SPECIAL PROVISIONS.

FOR CONCRETE WASHOUT, SEE SPECIAL PROVISIONS.

THE CONTRACTOR'S ATTENTION IS CALLED TO THE FACT THAT DUE TO THE NATURE OF PRESERVATION PROJECTS, THE EXTENT OF WORK CANNOT ALWAYS BE ACCURATELY DETERMINED PRIOR TO COMMENCEMENT OF WORK. REPAIR LOCATIONS AND ESTIMATES OF QUANTITIES ARE GIVEN WITH THE BEST INFORMATION AVAILABLE. IF ADDITIONAL REPAIRS NOT SHOWN ON THE DRAWINGS ARE DEEMED NECESSARY BY THE ENGINEER, THE ENGINEER SHALL NOTE ON THE DRAWINGS THE APPROXIMATE LOCATION AND DESCRIPTION OF THE REPAIRS.

EXISTING DIMENSIONS AND BRIDGE CONDITION ARE FROM THE BEST INFORMATION AVAILABLE. THE CONTRACTOR SHALL FIELD VERIFY THE INFORMATION SHOWN ON THE PLANS AND NOTIFY THE ENGINEER IF ACTUAL DIMENSIONS OR CONDITIONS DIFFER.

THE CONTRACTOR SHALL HAVE NO CLAIM WHATSOEVER AGAINST THE DEPARTMENT FOR ANY DELAYS OR ADDITIONAL COST INCURRED BASED ON DIFFERENCES BETWEEN WHAT IS SHOWN ON THE PLANS AND THE ACTUAL CONDITIONS AT THE PROJECT SITE.

IT IS THE CONTRACTOR'S RESPONSIBILITY TO FOLLOW ALL STATE AND FEDERAL SAFETY REQUIREMENTS.

WORK ON THE BRIDGE SHALL BE PERFORMED SO AS NOT TO ALLOW DEBRIS TO FALL BELOW, EXCEPT WHERE THE CONTRACTOR'S PLANS USE PLATFORMS, NETS, SCREENS OR OTHER PROTECTIVE DEVICES TO CATCH THE MATERIAL. THE CONTRACTOR SHALL SUBMIT PLANS FOR CONSTRUCTION IN ACCORDANCE WITH ARTICLE 402-2 OF THE STANDARD SPECIFICATIONS AND THE PROJECT SPECIAL PROVISIONS.

THE CONTRACTOR SHALL PERFORM ALL WORK WITH CARE SO THAT THE EXISTING STRUCTURE WHICH IS TO REMAIN IN PLACE WILL NOT BE DAMAGED. IF THE CONTRACTOR DAMAGES ANY PART OF THE EXISTING STRUCTURE WHICH IS TO REMAIN IN PLACE, THE DAMAGED AREA SHALL BE REPAIRED OR REPLACED IN A MANNER SATISFACTORY TO THE ENGINEER AT NO ADDITIONAL COST TO THE DEPARTMENT.

ANY DAMAGE TO THE EXISTING REINFORCING STEEL, DURING CONTRACTOR'S OPERATIONS, SHALL BE REPAIRED AS DIRECTED BY THE ENGINEER AND PERFORMED AT NO ADDITIONAL COST TO THE DEPARTMENT.

PRIOR TO BEGINNING WORK, THE CONTRACTOR SHALL SUBMIT FOR REVIEW AND APPROVAL A COMPLETE SEQUENCE OF TASKS FOR EACH OPERATION AFFECTING THE BRIDGE SURFACE AND/OR TRAFFIC.

GENERAL NOTES

DETAILS OF MACHINERY SHALL CONFORM TO THE LATEST AASHTO MOVABLE BRIDGE DESIGN SPECIFICATIONS UNLESS OTHERWISE SHOWN ON THE PLANS OR PROVIDED FOR IN THE SPECIFICATIONS.

THE CONTRACTOR SHALL FIELD VERIFY ALL DIMENSIONS ON THE PLANS AND SHALL NOTIFY THE ENGINEER IN WRITING OF ANY DISCREPANCIES PRIOR TO ORDERING ANY MATERIALS OR BEGINNING ANY REPAIR WORK. DIMENSIONS SHALL BE COORDINATED WITH ALL DRAWINGS AS REQUIRED.

WORK SHALL BE IN COMPLIANCE WITH THE OCCUPATIONAL SAFETY AND HEALTH ADMINISTRATION (OSHA) REGULATIONS, DEPARTMENT OF ENVIRONMENTAL QUALITY (DEQ) REGULATIONS, THE MOST CURRENT VERSION OF NCDOT STANDARD SPECIFICATIONS FOR ROADS AND STRUCTURES, FEDERAL AND STATE REGULATIONS AS APPLICABLE AND THE U.S. COAST GUARD.

DAMAGE TO THE EXISTING RAMP STRUCTURES, INCLUDING PAINT OR GALVANIZED COATINGS, CAUSED BY THE ACTIONS OF THE CONTRACTOR OR THEIR SUB-CONSULTANTS SHALL BE REPAIRED AT NO ADDITIONAL COST TO THE DEPARTMENT.

THE CONTRACTOR IS NOT ALLOWED TO STORE ANY MATERIALS OR EQUIPMENT ON THE RAMP, GANTRY STRUCTURE OR APPROACHES.

FOR RAMP MECHANICAL REPAIR WORK, SEE SPECIAL PROVISIONS.

FOR RAMP ELECTRICAL REPAIR WORK, SEE SPECIAL PROVISIONS.

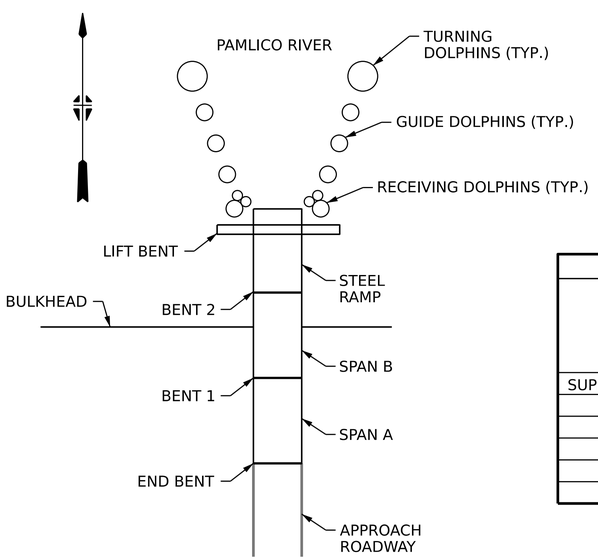

KEY PLAN

TOTAL BILL OF MATERIAL

	CONCRETE REPAIRS	STEEL BEAM CRACK REPAIR	STEEL BEARING REPAIRS	STEEL PILE REPAIRS	PILE JACKETS	STEEL REPAIRS	UNTREATED WHITE OAK TIMBER	ULTRA HIGH MOLECULAR WEIGHT POLYETHYLENE	RAMP MECHANICAL REPAIR WORK	RAMP ELECTRICAL REPAIR WORK
	CU. FT.	EACH	LUMP SUM	LBS.	LIN. FT.	LUMP SUM	LIN. FT.	SQ. FT.	LUMP SUM	LUMP SUM
SUPERSTRUCTURE	0.2	7								
BENT 1				298						
BENT 2				318	42.4					
LIFT BENT				370	133.6					
DOLPHINS							616	280		
TOTAL	0.2	7	LUMP SUM	986	176	LUMP SUM	616	280	LUMP SUM	LUMP SUM

PROJECT NO. 15BPR.164

BEAUFORT COUNTY

TERMINAL: AURORA

STATE OF NORTH CAROLINA
DEPARTMENT OF TRANSPORTATION
RALEIGH

BILL OF MATERIAL, GENERAL NOTES, AND KEY PLAN

NORTH CAROLINA PROFESSIONAL SEAL 049352 ENGINEER GREGORY E. MYERS

7/16/2026

Gregory E. Myers

REVISIONS						SHEET NO.
NO.	BY:	DATE:	NO.	BY:	DATE:	G1-01
1	--	--	3	--	--	TOTAL SHEETS
2	--	--	4	--	--	34

DES BY: G. MYERS DATE: 11/2025
DES CHK: D. KNICKERBOCKER DATE: 11/2025
DWG BY: B. PETERSON DATE: 11/2025
CHK BY: G. MYERS DATE: 11/2025

HDR Engineering, Inc. of the Carolinas
555 Fayetteville St., Suite 900 Raleigh, N.C. 27601
N.C.B.E.L.S. License Number: F-0116

DOCUMENT NOT CONSIDERED FINAL UNLESS ALL SIGNATURES COMPLETED

Docusign Envelope ID: 500D4102-4BD1-8175-811B-AF137D171DE3

END ELEVATION AT SPAN 2 UNIT 5

SPALL IN END OF UNIT AT BENT 2 ADJACENT TO UNIT 6

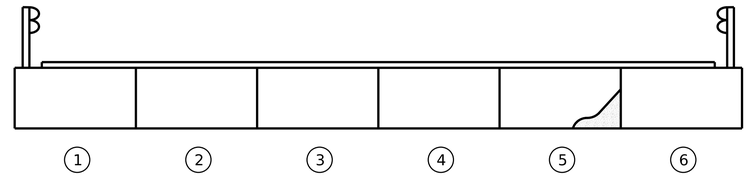

SUPERSTRUCTURE TYPICAL SECTION

(LOOKING AWAY FROM SHORE)

(#) CORED SLAB UNIT NUMBER

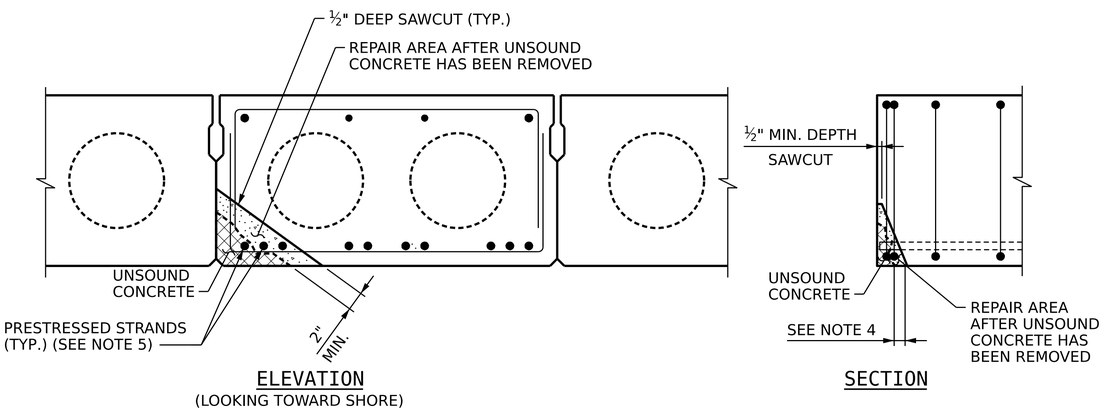

CORED SLAB SPALL REPAIR

CONCRETE REPAIRS		
	ESTIMATED	AS-BUILT
SPAN 2 UNIT 5 @ BENT 2	0.2 CU. FT.	

REPAIR SEQUENCE:

1. SOUND CONCRETE TO DETERMINE EXTENTS OF REPAIR LOCATION. (PICTURE REQUIRED)
2. REMOVE SURFACE CONCRETE TO VERIFY THAT SAWCUT DEPTH WILL NOT DAMAGE EXISTING REINFORCING STEEL. SAW CUT AROUND REPAIR AREA TO A NOMINAL DEPTH OF ½".
3. REMOVE CONCRETE WITHIN SAW CUT AREA TO MINIMUM ½" DEPTH. IF CONCRETE IS DAMAGED BEYOND THE LIMITS OF THE ORIGINAL SAW CUT, NOTIFY THE ENGINEER IN WRITING (WITH PHOTOGRAPHS) AND PROPOSE NEW SAW CUT LOCATIONS.
4. IF MORE THAN HALF THE CIRCUMFERENCE OF A REINFORCING BAR IS EXPOSED DURING THIS PROCESS, REMOVE ADDITIONAL CONCRETE TO 1" BEHIND THE BAR. THIS DOES NOT APPLY TO PRESTRESSED STRANDS.
5. UNSOUND CONCRETE MUST BE REMOVED, HOWEVER, PRESTRESSED STRANDS SHOULD NOT BE DISTURBED UNLESS ABSOLUTELY NECESSARY. USE EXTREME CARE TO NOT DAMAGE PRESTRESSED STRANDS.
6. USE A WIRE BRUSH TO CLEAN ALL EXPOSED REINFORCING BARS AND PRESTRESSED STRANDS. FOR BARS WITH MORE THAN 10% SECTION LOSS, SPLICE AND SECURELY TIE SUPPLEMENTAL REINFORCING BARS AS NEEDED. NOTIFY THE ENGINEER IN WRITING WITH DETAILED DOCUMENTATION, INCLUDING LOCATION AND SEVERITY, OF ALL DAMAGE TO PRESTRESSED STRANDS THAT EXCEEDS 10% SECTION LOSS. IF FIVE OR MORE STRANDS ARE DAMAGED, NOTIFY THE ENGINEER PRIOR TO PLACEMENT OF REPAIR MATERIAL.
7. AFTER REMOVING UNSOUND CONCRETE AND REPAIRING ANY DAMAGED REINFORCING BARS OR PRESTRESSED STRANDS, CLEAN THE REPAIR AREA OF DIRT, GREASE, OIL, AND OTHER FOREIGN MATTER. PROVIDE THE ENGINEER WITH A PHOTOGRAPH OF THE CLEANED REPAIR AREA FOR APPROVAL PRIOR TO PROCEEDING FURTHER.
8. SURFACE PREPARATION, PROPORTIONING, MIXING, PLACEMENT, AND CURING OF REPAIR MATERIAL SHALL FOLLOW THE MATERIAL MANUFACTURER'S RECOMMENDATIONS.

NOTES

SEE "BILL OF MATERIAL, GENERAL NOTES, AND KEY PLAN" SHEET FOR GENERAL LAYOUT AND LOCATION OF REPAIRS.

THE REPAIR MATERIAL SHALL BE A PREPACKAGED MATERIAL ON THE NCDOT APPROVED PRODUCTS LIST AND SHALL HAVE A MINIMUM COMPRESSIVE STRENGTH OF 5000 PSI OR GREATER. THE MAXIMUM SIZE OF AGGREGATE IN THE REPAIR MATERIAL SHALL NOT EXCEED 2/3 OF THE MINIMUM DEPTH OF THE REPAIR. USE A BONDING AGENT AS SPECIFIED BY THE REPAIR MATERIAL'S MANUFACTURER. SUBMIT REPAIR MATERIALS TO THE ENGINEER FOR REVIEW PRIOR TO ORDERING MATERIALS OR BEGINNING ANY REPAIR WORK.

FOR REPAIRS SHALLOW REPAIRS THAT DO NOT ENGAGE REINFORCEMENT, ANCHOR PATCH MATERIAL USING ¼" GALVANIZED BOLTS, EPOXY ANCHORED WITH 2" EMBEDMENT. PLACE BOLTS IN A 6" GRID. USE A LATEX OR EPOXY PATCH MATERIAL FOR IMPROVED BOND. USE EXTREME CARE TO NOT DAMAGE PRESTRESSED STRANDS.

PROJECT NO. 15BPR.164

BEAUFORT COUNTY

TERMINAL: AURORA

STATE OF NORTH CAROLINA
DEPARTMENT OF TRANSPORTATION
RALEIGH

PRESTRESSED CORED SLAB REPAIR DETAILS

NORTH CAROLINA PROFESSIONAL SEAL 049352 ENGINEER GREGORY E. MYERS

7/16/2026

Gregory E. Myers

REVISIONS						
NO.	BY:	DATE:	NO.	BY:	DATE:	
1	--	--	3	--	--	
2	--	--	4	--	--	

SHEET NO. S1-01

TOTAL SHEETS 34

DES BY: G. MYERS	DATE : 12/25	DWG BY: B. PETERSON	DATE : 11/25
DES CHK: N. NEIHEISEL	DATE : 12/25	CHK BY: N. NEIHEISEL	DATE : 12/25

HDR Engineering, Inc. of the Carolinas
555 Fayetteville St., Suite 900 Raleigh, N.C. 27601
N.C.B.E.L.S. License Number: F-0116

DOCUMENT NOT CONSIDERED FINAL UNLESS ALL SIGNATURES COMPLETED

Docusign Envelope ID: 500D4102-4BD1-8175-811B-AF137D171DE3

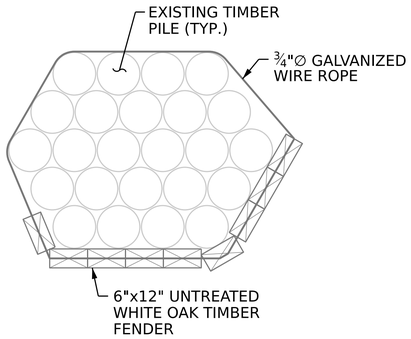

PLAN

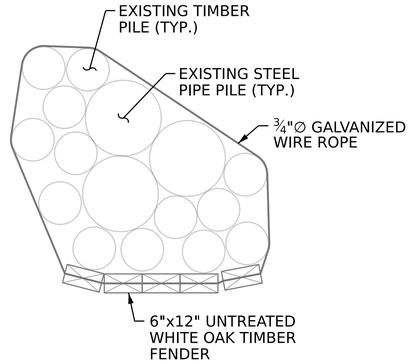

PLAN

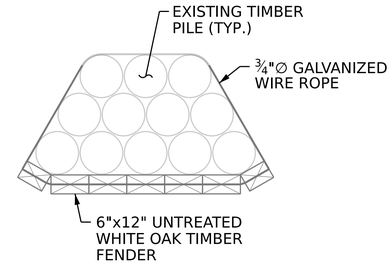

PLAN

NOTES

FOR DOLPHIN FENDERS, SEE SPECIAL PROVISIONS.

ATTACH THE 6" x 12" WHITE OAK FENDERS TO EXISTING DOLPHINS WITH 3/4" ∅ WIRE ROPE THROUGH THE OAK, OVER AND AROUND DOLPHINS AS SHOWN. SECURE THE 3/4" ∅ WIRE ROPE WITH 3/8" SQUARE STAPLES AND TWO CABLE CLAMPS AT EACH END.

GALVANIZED WIRE ROPE USED FOR INSTALLING UNTREATED WHITE OAK TIMBER FENDERS SHALL CONFORM TO ASTM A603 CLASS B. STAINLESS STEEL WIRE ROPE SHALL CONFORM TO ASTM A580 TYPE 316.

ALL HARDWARE SHALL BE GALVANIZED UNLESS OTHERWISE NOTED.

THE 6" x 12" UNTREATED WHITE OAK TIMBER FENDERS SHALL BE FACED AS SHOWN WITH 2" THICK x 12" WIDE x 5'-0" LONG ULTRA HIGH MOLECULAR POLYETHYLENE.

NO SEPARATE MEASUREMENT OR PAYMENT WILL BE MADE FOR WIRE ROPE USED TO INSTALL UNTREATED WHITE OAK TIMBER FENDER, HARDWARE, TOOLS, EQUIPMENT, OR LABOR. THIS WORK AND MATERIALS SHALL BE INCLUDED IN THE CONTRACT UNIT BID PRICE FOR UNTREATED STRUCTURAL TIMBER.

BOLTS FOR THE ATTACHMENT OF UHMW-PE FACING TO UNTREATED TIMBER WHITE OAK FENDERING SHALL BE IN ACCORDANCE WITH ASTM F593 GROUP 2 (TYPE 316 STAINLESS STEEL).

THE DOLPHIN CLASSIFICATIONS SHOWN ARE GENERAL. TURNING DOLPHINS GENERALLY REFER TO DOLPHINS AT THE SLIP ENTRANCE. RECEIVING DOLPHINS REFER TO DOLPHINS IMMEDIATELY IN FRONT OF THE RAMP. GUIDE DOLPHINS GENERALLY REFER TO DOLPHINS LINING THE SLIP. INDIVIDUAL DOLPHINS MAY VARY. CONTRACTOR SHALL FIELD VERIFY EXISTING PILE AND FENDER COUNTS FOR INDIVIDUAL DOLPHINS AND NOTIFY THE ENGINEER OF ANY DISCREPANCIES IN WRITING PROIR TO ORDERING MATERIALS OF PERFORMING REPAIRS.

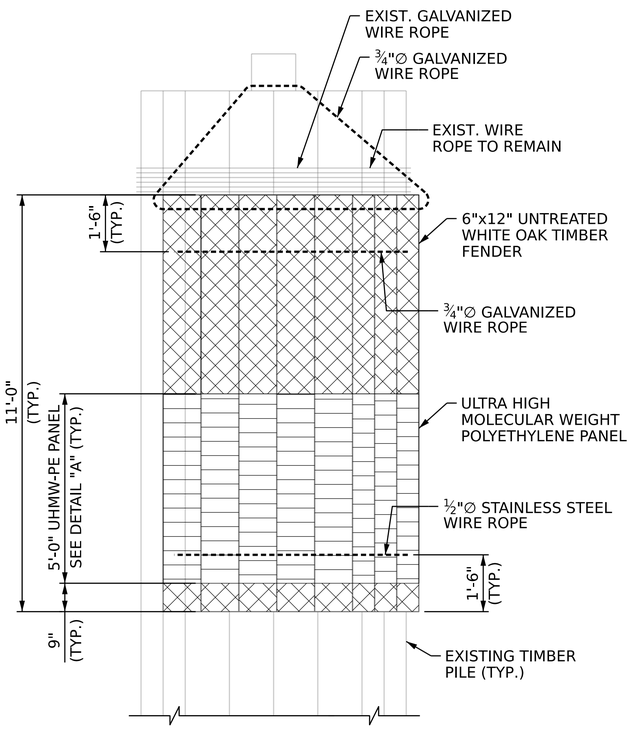

ELEVATION
TURNING DOLPHIN

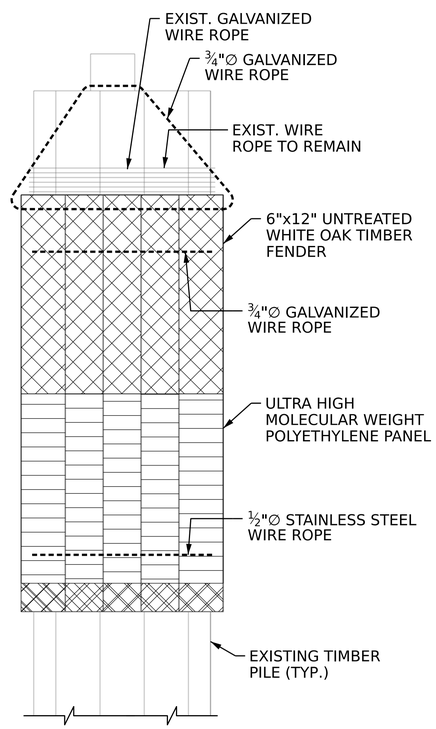

ELEVATION
RECEIVING DOLPHIN

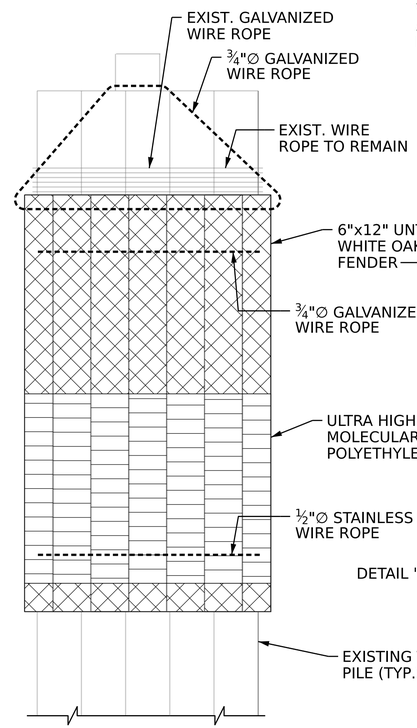

ELEVATION
GUIDE DOLPHIN

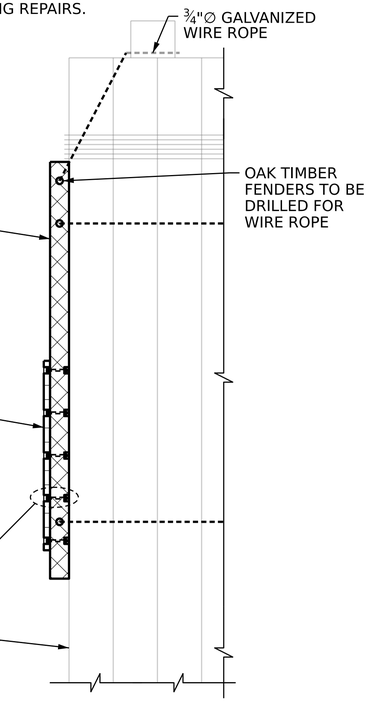

TYP. END ELEVATION

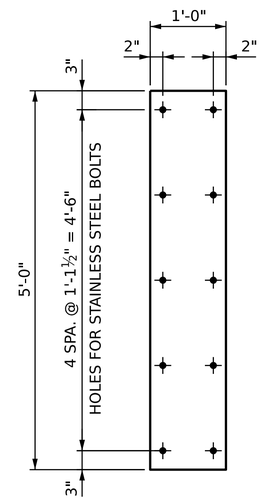

DETAIL "A"

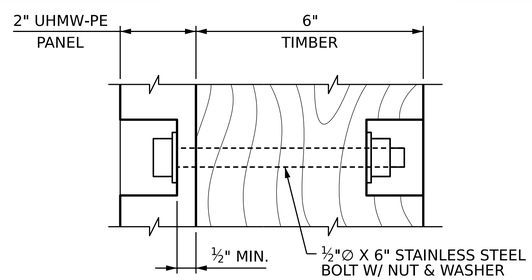

DETAIL "B"

ESTIMATED QUANTITIES	
ULTRA HIGH MOLECULAR WEIGHT POLYETHYLENE	UNTREATED WHITE OAK TIMBER
SQ. FT.	LIN. FT.
280	616

PROJECT NO. 15BPR.164
BEAUFORT COUNTY
TERMINAL: AURORA

STATE OF NORTH CAROLINA
DEPARTMENT OF TRANSPORTATION
RALEIGH

DOLPHIN FENDER PANEL REPLACEMENT DETAILS

NORTH CAROLINA PROFESSIONAL SEAL 025266 ENGINEER SCOTT A. McCOY
7/16/2026

REVISIONS							SHEET NO.
NO.	BY:	DATE:	NO.	BY:	DATE:		S1-02
1	--	--	3	--	--		TOTAL SHEETS
2	--	--	4	--	--		34

DES BY: G. MYERS	DATE : 11/2025	DWG BY: B. PETERSON	DATE : 11/2025
DES CHK: L. CRESSMAN	DATE : 11/2025	CHK BY: L. CRESSMAN	DATE : 11/2025

HDR Engineering, Inc. of the Carolinas
555 Fayetteville St., Suite 900 Raleigh, N.C. 27601
N.C.B.E.L.S. License Number: F-0116

DOCUMENT NOT CONSIDERED FINAL UNLESS ALL SIGNATURES COMPLETED

Docusign Envelope ID: 500D4102-4BD1-8175-811B-AF137D171DE3

LEFT CROSS BEAM AT GANTRY CAP BEAM

LEFT CROSS BEAM AT GANTRY CAP BEAM

NOTES

IMAGE IS TAKEN FROM SPECIAL INSPECTION REPORT DATED 11/02/2023. PRIOR TO BEGINING ANY REPAIR WORK, FIELD VERIFY EXISTING CONDITIONS. IF EXISTING CONDITIONS VARY SIGNIFICANTLY FROM IMAGES SHOWN, NOTIFY THE ENGINEER IN WRITING PRIOR TO ORDERING MATERIALS OR BEGINNING REPAIR WORK.

HIGH-STRENGTH STRUCTURAL STEEL BOLTS SHALL BE ASTM F3125 GRADE A325 WITH ASTM A563 GRADE DH NUTS AND ASTM F436 HARDENED WASHERS, TYPE 1 OR 3. FASTENER HARDWARE ALL SHALL BE HOT-DIP GALVANIZED PER ASTM F2329.

SURFACE PREPARATION FOR WELDING AND/OR PAINTING: REMOVE RUST, PAINT, AND OTHER CONTAMINANTS DOWN TO BARE STEEL TO SSPC-SP3 STANDARDS. VACUUM-ASSISTED HAND POWER TOOLS SHALL BE USED FOR CAPTURE AND CONTAINMENT OF CONTAMINANTS. SAND BLASTING SHALL NOT BE PERMITTED OVER WATER.

CROSS BEAM AND PULLEY BOLT REPLACEMENT REPAIR PROCEDURE:

1. CLEAN AND PREPARE THE SURFACE A MINIMUM RADUIS OF 3" AROUND EACH EXISTING BOLT TO BE REPLACED.
2. TEMPORARILY SUPPORT THE LIFT BEAM AND COUNTERWEIGHT SYSTEM TO ELIMINATE LOAD APPLIED FROM THE CABLE TO THE PULLEY.
3. ONE AT A TIME, REMOVE EXISTING DETERIORATED BOLTS AND INSTALL NEW ¾"-DIAMETER HIGH-STRENGTH BOLTS WITH DOUBLE NUTS.
4. FULLY TORQUE ALL NEW BOLTS.
5. PAINT THE EXPOSED STEEL AND CONNECTION COMPONENTS IN THE REPAIR AREA IN ACCORDANCE WITH SECTION 442-12 OF THE STANDARD SPECIFICATIONS, USING PAINT SYSTEM 4 FROM NCDOT'S STRUCTURAL STEEL SHOP COATINGS PROGRAM DOCUMENT, WITH TOPCOAT COLOR MATCHED TO THE EXISTING TOPCOAT COLOR.

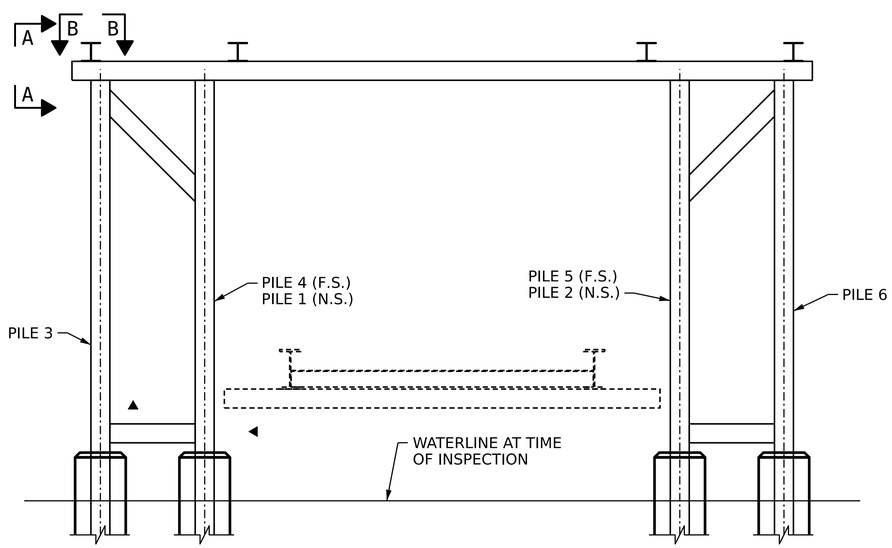

ELEVATION OF LIFT BENT

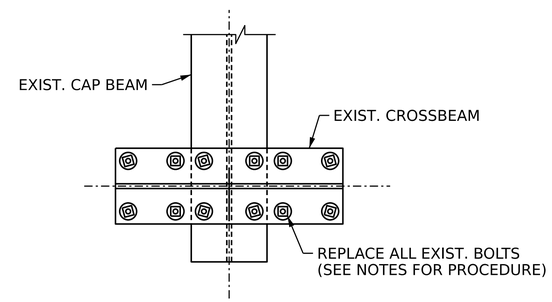

SECTION B-B

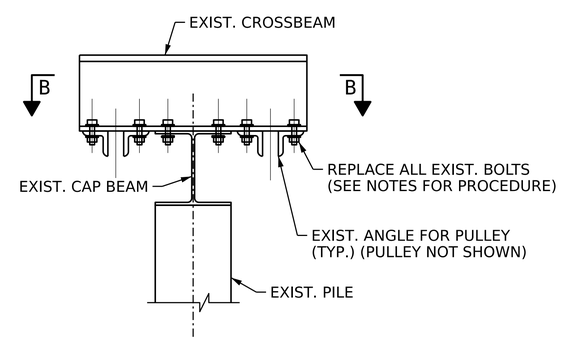

VIEW A-A

PROJECT NO. 15BPR.164

BEAUFORT COUNTY

TERMINAL: AURORA

STATE OF NORTH CAROLINA
DEPARTMENT OF TRANSPORTATION
RALEIGH

LIFT BENT REPAIR DETAILS

NORTH CAROLINA PROFESSIONAL SEAL 045005 ENGINEER DAVID KNICKERBOCKER
7/16/2026
DAVID KNICKERBOCKER

HDR Engineering, Inc. of the Carolinas
555 Fayetteville St., Suite 900 Raleigh, N.C. 27601
N.C.B.E.L.S. License Number: F-0116

DOCUMENT NOT CONSIDERED FINAL UNLESS ALL SIGNATURES COMPLETED

REVISIONS						
NO.	BY:	DATE:	NO.	BY:	DATE:	
1	--	--	3	--	--	
2	--	--	4	--	--	

SHEET NO. S1-03

TOTAL SHEETS 34

DES BY: B. BINOWSKI	DATE : 11/2025	DWG BY: B. PETERSON	DATE : 11/2025
DES CHK: D. KNICKERBOCKER	DATE : 11/2025	CHK BY: D. KNICKERBOCKER	DATE : 11/2025

Docusign Envelope ID: 500D4102-4BD1-8175-811B-AF137D171DE3

NORTH FACE OF FLOORBEAM 9
AT GIRDER 2
(OTHER STEEL BEAM CRACK REPAIR AREAS SIMILAR)

NORTH FACE OF FLOORBEAM 11
AT GIRDER 1
(OTHER STEEL BEAM CRACK REPAIR AREAS SIMILAR)

STEEL BEAM CRACK REPAIR LOCATION TABLE		
NO.	GIRDER NO.	FLOORBEAM NO.
1	GIRDER 1	FLOORBEAM 1
2	GIRDER 1	FLOORBEAM 4
3	GIRDER 1	FLOORBEAM 11 (X2)
4	GIRDER 2	FLOORBEAM 1
5	GIRDER 2	FLOORBEAM 9
6	GIRDER 2	FLOORBEAM 11

NOTES

WORK DEFINED IN THIS DRAWING SHALL BE PERFORMED IN ACCORDANCE WITH - AND PAID FOR UNDER - 'STEEL BEAM CRACK REPAIRS' AS REFERENCED IN THE PROJECT SPECIAL PROVISIONS.

IMAGES ARE TAKEN FROM SPECIAL INSPECTION REPORT DATED 11/02/2023. PRIOR TO BEGINNING ANY REPAIR WORK, FIELD VERIFY EXISTING CONDITIONS. IF EXISTING CONDITIONS VARY SIGNIFICANTLY FROM IMAGES SHOWN, NOTIFY THE ENGINEER IN WRITING PRIOR TO ORDERING MATERIALS OR BEGINNING REPAIR WORK.

IMAGES SHOW TWO EXAMPLES OF CRACKS NEEDING REPAIR. SEE "STEEL BEAM CRACK REPAIR LOCATION TABLE" FOR ALL CRACK REPAIR LOCATIONS.

SURFACE PREPARATION FOR WELDING AND/OR PAINTING: REMOVE RUST, PAINT, AND OTHER CONTAMINANTS DOWN TO BARE STEEL TO SSPC-SP3 STANDARDS. VACUUM-ASSISTED HAND POWER TOOLS SHALL BE USED FOR CAPTURE AND CONTAINMENT OF CONTAMINANTS. SAND BLASTING SHALL NOT BE PERMITTED OVER WATER.

CRACK REPAIR PROCEDURE NOTES:

1. LOCATE THE CRACK TIP USING MAGNETIC PARTICLE TESTING (MT) OR DYE-PENETRANT TESTING (PT). INSPECT BOTH SIDES OF THE PLATE TO ENSURE THE TIP IS NOT MISSED.
2. POSITION MAGNETIC BASED DRILL AS SHOWN RELATIVE TO THE AS-LOCATED CRACK TIP.
3. DRILL HOLE WITH ANNULAR CUTTER.
4. CHECK DRILLED PLATE AND REMOVED CORE FOR EVIDENCE OF CRACK TIP.
5. FOLLOWING REMOVAL OF THE CORE, REINSPECT THE EDGE OF THE DRILLED HOLE USING MT OR PT TO ENSURE THE CRACK TIP DOES NOT REMAIN.
6. SAND THE EDGES OF THE DRILLED HOLE USING AN 80 TO 100 GRIT FLAP WHEEL WITH AN ANGLE GRINDER ON THE EXTERIOR EDGES AND AN 80 TO 100 GRIT FLAP WHEEL WITH DIE GRINDER ON THE INTERIOR EDGES.
7. CLEAN AND PREPARE THE REPAIR AREA FOR FINISHING.
8. INSTALL 1-INCH DIA. BOLT WITH WASHER ON EACH WEB FACE.
9. PAINT THE EXPOSED STEEL AND CONNECTION COMPONENTS IN THE REPAIR AREA IN ACCORDANCE WITH SECTION 442-12 OF THE STANDARD SPECIFICATIONS, USING PAINT SYSTEM 4 FROM NCDOT'S STRUCTURAL STEEL SHOP COATINGS PROGRAM DOCUMENT, WITH TOPCOAT COLOR MATCHED TO THE EXISTING TOPCOAT COLOR.

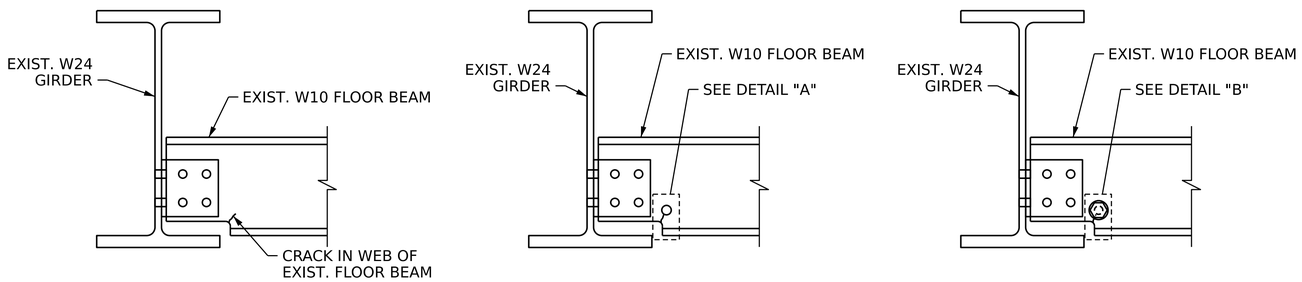

EXISTING CONDITION — HOLE PREPARATION CONDITION — FINAL CONDITION

FLOOR BEAM WEB CRACK REPAIR DETAILS

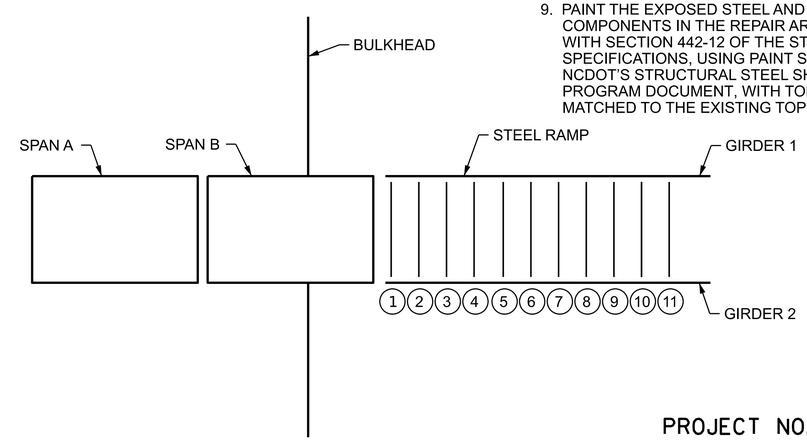

PLAN LAYOUT

(#) FLOOR BEAM NUMBER (TYP.)

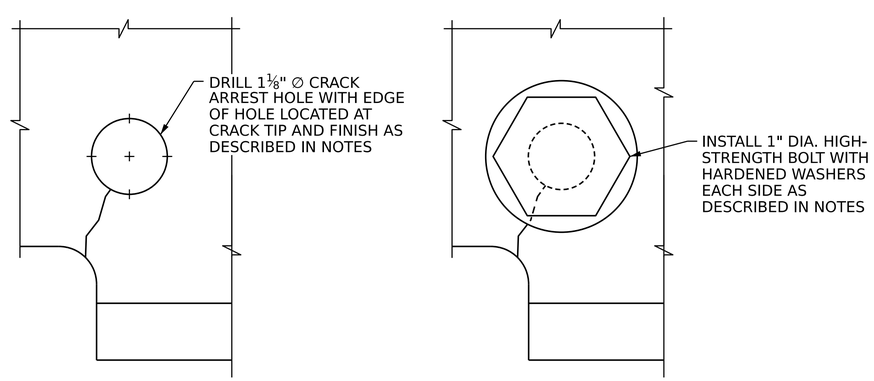

DETAIL "A" — DETAIL "B"

PROJECT NO. 15BPR.164
BEAUFORT COUNTY
TERMINAL: AURORA

STATE OF NORTH CAROLINA
DEPARTMENT OF TRANSPORTATION
RALEIGH

STEEL BEAM CRACK REPAIR DETAILS

NORTH CAROLINA PROFESSIONAL SEAL 045005 ENGINEER DAVID KNICKERBOCKER
7/16/2026
DAVID KNICKERBOCKER

HDR Engineering, Inc. of the Carolinas
555 Fayetteville St., Suite 900 Raleigh, N.C. 27601
N.C.B.E.L.S. License Number: F-0116

DOCUMENT NOT CONSIDERED FINAL UNLESS ALL SIGNATURES COMPLETED

REVISIONS								SHEET NO.
NO.	BY:	DATE:	NO.	BY:	DATE:			S1-04
1	--	--	3	--	--			TOTAL SHEETS
2	--	--	4	--	--			34

DES BY: B. BINOWSKI	DATE : 11/2025	DWG BY: B. PETERSON	DATE : 11/2025
DES CHK: D. KNICKERBOCKER	DATE : 11/2025	CHK BY: D. KNICKERBOCKER	DATE : 11/2025

Docusign Envelope ID: 500D4102-4BD1-8175-811B-AF137D171DE3

IMAGE OF PILE 4

(OTHER PILES SIMILAR)

IMAGE OF PILE 3

(OTHER PILES SIMILAR)

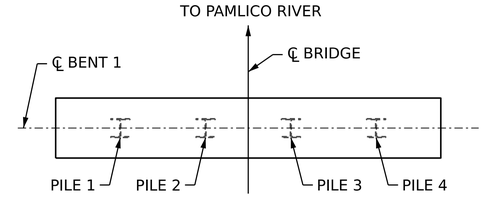

PLAN OF BENT 1

ESTIMATED STEEL PILE REPAIR QUANTITIES				
BENT NO.	PILE NO.	REPAIR TYPE	DETERIORATION LOCATION	QUANTITY (LBS.)
1	1	WELDED PLATE REPAIR	FULL HEIGHT OF EXPOSED PILE	67
	2	WELDED PLATE REPAIR	FULL HEIGHT OF EXPOSED PILE	82
	3	WELDED PLATE REPAIR	FULL HEIGHT OF EXPOSED PILE	67
	4	WELDED PLATE REPAIR	FULL HEIGHT OF EXPOSED PILE	82

NOTES

WORK DEFINED IN THIS DRAWING SHALL BE PERFORMED IN ACCORDANCE WITH - AND PAID FOR UNDER - 'STEEL PILE REPAIRS' AS REFERENCED IN THE PROJECT SPECIAL PROVISIONS.

IMAGES ARE TAKEN FROM SPECIAL INSPECTION REPORT DATED 11/02/2023. PRIOR TO BEGINNING ANY REPAIR WORK, FIELD VERIFY EXISTING CONDITIONS. IF EXISTING CONDITIONS VARY SIGNIFICANTLY FROM IMAGES SHOWN, NOTIFY THE ENGINEER IN WRITING PRIOR TO ORDERING MATERIALS OR BEGINNING REPAIR WORK.

* LOSSES IN EXCESS OF 33% TO ANY PILE FLANGE OR WEB SHALL BE DEFINED AS "SIGNIFICANT", PROMPTING REQUIREMENT OF WELDED STEEL PILE REPAIR MATERIAL AS SHOWN. MATERIAL SHALL BE INSTALLED AT DIMENSIONS SHOWN, SUBJECT TO ASSOCIATED LIMITS. RESULTING TOTAL CROSS-SECTIONAL AREA OF ANY REPAIRED FLANGE (OR WEB) SHALL EQUAL OR EXCEED THE AS-FABRICATED FLANGE (OR WEB) AREA PER ORIGINAL PILE DESIGNATION DIMENSIONS.

SURFACE PREPARATION FOR WELDING AND/OR PAINTING: REMOVE RUST, PAINT, AND OTHER CONTAMINANTS DOWN TO BARE STEEL TO SSPC-SP3 STANDARDS. VACUUM-ASSISTED HAND POWER TOOLS SHALL BE USED FOR CAPTURE AND CONTAINMENT OF CONTAMINANTS. SAND BLASTING SHALL NOT BE PERMITTED OVER WATER.

WELDED PLATE REPAIR PROCEDURE NOTES:

1. REMOVE LOOSE RUST AND MARINE GROWTH FROM THE EXISTING STEEL PILE TO OBTAIN A CLEAN, SOUND SURFACE PRIOR TO PERFORMING STEEL REPAIRS AND PILE JACKETING, USING APPROVED MECHANICAL MEANS OR HIGH-PRESSURE WATER BLASTING.IF ADDITIONAL SECTION LOSS GREATER THAN 33% IS FOUND ON ANY PILE FLANGE OR WEB, NOTIFY THE ENGINEER.
2. TACK WELD NEW REPAIR PLATE INTO THE PROPER LOCATION. ENSURE REPAIR PLATE EXTENDS A MINIMUM OF 4" ONTO THE PILE FLANGE WITH ACCEPTABLE SECTION BEYOND THE DETERIORATED SECTION OF THE PILE FLANGE.
3. WELD NEW REPAIR PLATES. IF A NEW PLATE IS IN CONTACT WITH AN EXISTING REPAIR PLATE, BUTT WELD THE INTERFACE BETWEEN THE TWO PLATES.
4. PAINT THE EXPOSED STEEL AND CONNECTION COMPONENTS IN THE REPAIR AREA IN A ACCORDANCE WITH SECTION 442-12 OF THE STANDARD SPECIFICATIONS, USING PAINT SYSTEM 4 FROM NCDOT'S STRUCTURAL STEEL SHOP COATINGS PROGRAM DOCUMENT, WITH TOPCOAT COLOR MATCHED TO THE EXISTING TOPCOAT COLOR
5. BACKFILL AREA EXCAVATED AROUND THE PILE TO RESTORE THE EXISTING GROUND LINE.

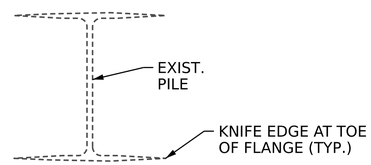

PLAN

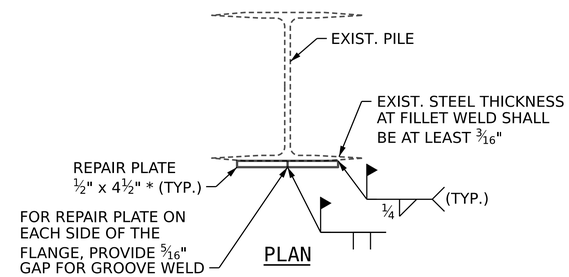

PLAN

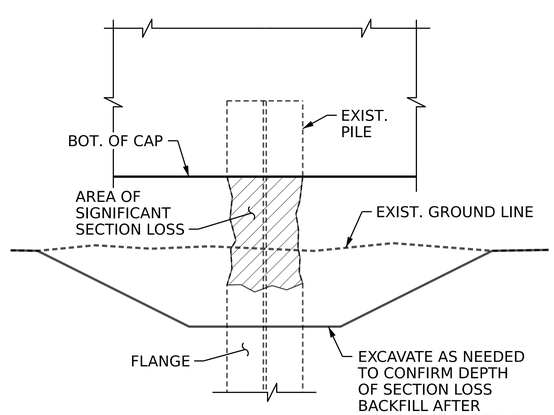

ELEVATION

EXISTING CONDITION

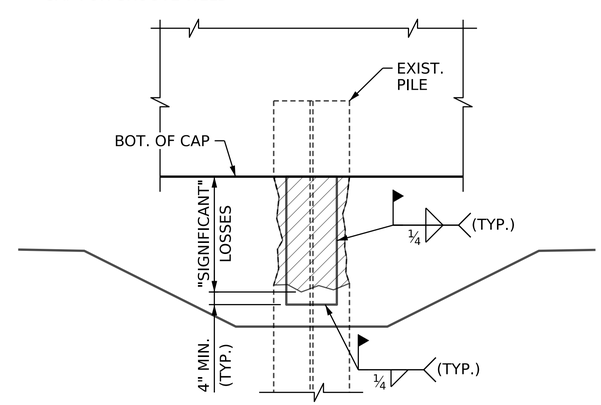

ELEVATION

PILE REPAIR DETAIL

HP12x53 STEEL PILE REPAIR DETAILS

PROJECT NO. 15BPR.164

BEAUFORT COUNTY

TERMINAL: AURORA

STATE OF NORTH CAROLINA
DEPARTMENT OF TRANSPORTATION
RALEIGH

BENT 1 STEEL PILE REPAIR DETAILS

NORTH CAROLINA PROFESSIONAL SEAL 045005 ENGINEER DAVID KNICKERBOCKER
7/16/2026
DAVID KNICKERBOCKER

REVISIONS							
NO.	BY:	DATE:	NO.	BY:	DATE:		
1	--	--	3	--	--		
2	--	--	4	--	--		

SHEET NO. S1-05

TOTAL SHEETS 34

HDR Engineering, Inc. of the Carolinas
555 Fayetteville St., Suite 900 Raleigh, N.C. 27601
N.C.B.E.L.S. License Number: F-0116

DOCUMENT NOT CONSIDERED FINAL UNLESS ALL SIGNATURES COMPLETED

DES BY: B. BINOWSKI	DATE : 11/2025	DWG BY: B. PETERSON	DATE : 11/2025
DES CHK: D. KNICKERBOCKER	DATE : 11/2025	CHK BY: D. KNICKERBOCKER	DATE : 11/2025

Docusign Envelope ID: 500D4102-4BD1-8175-811B-AF137D171DE3

SOUTH FACE OF PILE 4

LEFT SIDE OF PILE 3

NORTH FACE OF PILE 1

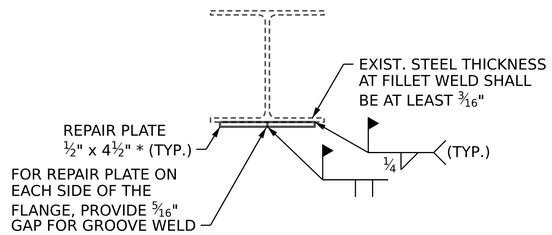

PLAN - REPAIR PLATE

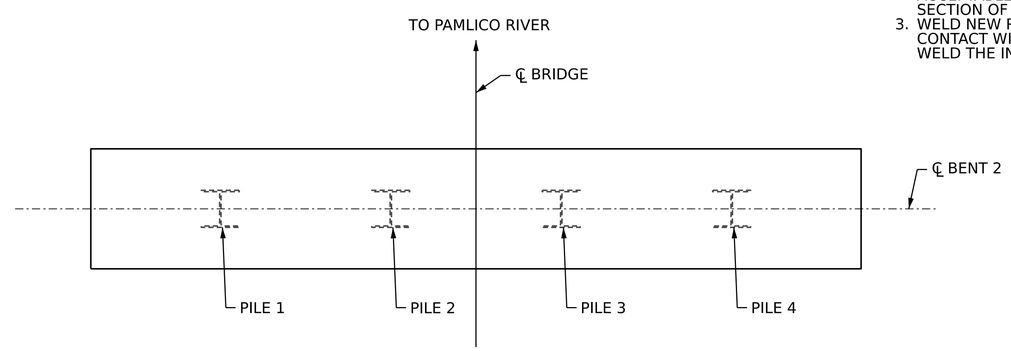

PLAN OF BENT 2

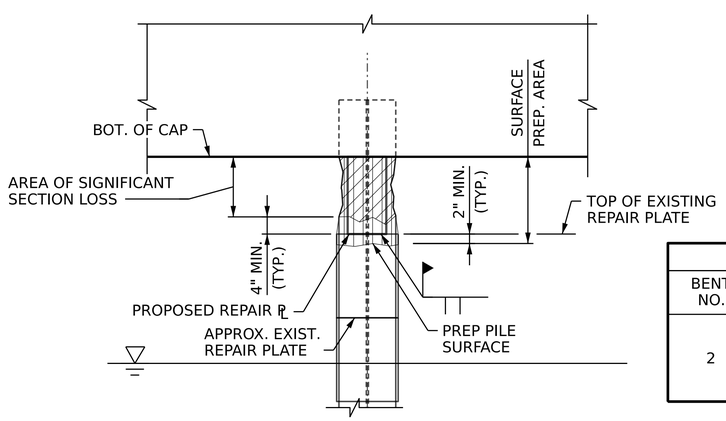

ELEVATION - REPAIR PLATE

HP12x53 STEEL PILE REPAIR DETAILS

ESTIMATED STEEL PILE REPAIR QUANTITIES				
BENT NO.	PILE NO.	REPAIR TYPE	DETERIORATION LOCATION	QUANTITY (LBS.)
2	1	WELDED PLATE REPAIR	ABOVE & BELOW EXISTING REPAIR PLATE, AT WATERLINE	87
	2	WELDED PLATE REPAIR	ABOVE & BELOW EXISTING REPAIR PLATE	87
	3	WELDED PLATE REPAIR	ABOVE & BELOW EXISTING REPAIR PLATE, AT WATERLINE	72
	4	WELDED PLATE REPAIR	ABOVE & BELOW EXISTING REPAIR PLATE	72

NOTES

WORK DEFINED IN THIS DRAWING SHALL BE PERFORMED IN ACCORDANCE WITH - AND PAID FOR UNDER - 'STEEL PILE REPAIRS' AS REFERENCED IN THE PROJECT SPECIAL PROVISIONS.

IMAGES ARE TAKEN FROM SPECIAL INSPECTION REPORT DATED 11/02/2023. PRIOR TO BEGINNING ANY REPAIR WORK, FIELD VERIFY EXISTING CONDITIONS. IF EXISTING CONDITIONS VARY SIGNIFICANTLY FROM IMAGES SHOWN, NOTIFY THE ENGINEER IN WRITING PRIOR TO ORDERING MATERIALS OR BEGINNING REPAIR WORK.

* LOSSES IN EXCESS OF 33% TO ANY PILE FLANGE OR WEB SHALL BE DEFINED AS "SIGNIFICANT", PROMPTING REQUIREMENT OF WELDED STEEL PILE REPAIR MATERIAL AS SHOWN. MATERIAL SHALL BE INSTALLED AT DIMENSIONS SHOWN, SUBJECT TO ASSOCIATED LIMITS. RESULTING TOTAL CROSS-SECTIONAL AREA OF ANY REPAIRED FLANGE (OR WEB) SHALL EQUAL OR EXCEED THE AS-FABRICATED PLATE AREA PER ORIGINAL PILE DESIGNATION DIMENSIONS.

SURFACE PREPARATION FOR WELDING AND/OR PAINTING: REMOVE RUST, PAINT, AND OTHER CONTAMINANTS DOWN TO BARE STEEL TO SSPC-SP3 STANDARDS. VACUUM-ASSISTED HAND POWER TOOLS SHALL BE USED FOR CAPTURE AND CONTAINMENT OF CONTAMINANTS. SAND BLASTING SHALL NOT BE PERMITTED OVER WATER.

SEE SHEET S1-08 AND S1-10 FOR DETAILS OF THE FRP ENCASEMENT REPAIR DETAILS ON BENT 2.

WELDED PLATE REPAIR PROCEDURE NOTES:

1. REMOVE LOOSE RUST AND MARINE GROWTH FROM THE EXISTING STEEL PILE TO OBTAIN A CLEAN, SOUND SURFACE PRIOR TO PERFORMING STEEL REPAIRS AND PILE JACKETING, USING APPROVED MECHANICAL MEANS OR HIGH-PRESSURE WATER BLASTING. IF ADDITIONAL SECTION LOSS GREATER THAN 33% IS FOUND TO ANY PILE FLANGE OR WEB, NOTIFY THE ENGINEER.
2. TACK WELD NEW REPAIR PLATE INTO THE PROPER LOCATION. ENSURE REPAIR PLATE EXTENDS A MINIMUM OF 4" ONTO THE PILE FLANGE WITH ACCEPTABLE SECTION BEYOND THE DETERIORATED SECTION OF THE PILE FLANGE.
3. WELD NEW REPAIR PLATES. IF A NEW PLATE IS IN CONTACT WITH AN EXISTING REPAIR PLATE, BUTT WELD THE INTERFACE BETWEEN THE TWO PLATES.

PROJECT NO. 15BPR.164
BEAUFORT COUNTY
TERMINAL: AURORA

STATE OF NORTH CAROLINA
DEPARTMENT OF TRANSPORTATION
RALEIGH

BENT 2 STEEL PILE REPAIR DETAILS

NORTH CAROLINA PROFESSIONAL SEAL 045005 ENGINEER DAVID KNICKERBOCKER
7/16/2026
DAVID KNICKERBOCKER

HDR Engineering, Inc. of the Carolinas
555 Fayetteville St., Suite 900 Raleigh, N.C. 27601
N.C.B.E.L.S. License Number: F-0116

DOCUMENT NOT CONSIDERED FINAL UNLESS ALL SIGNATURES COMPLETED

REVISIONS								SHEET NO.
NO.	BY:	DATE:	NO.	BY:	DATE:			S1-06
1	--	--	3	--	--			TOTAL SHEETS
2	--	--	4	--	--			34

DES BY: B. BINOWSKI	DATE : 11/2025	DWG BY: B. PETERSON	DATE : 11/2025
DES CHK: D. KNICKERBOCKER	DATE : 11/2025	CHK BY: D. KINCKERBOCKER	DATE : 11/2025

Docusign Envelope ID: 500D4102-4BD1-8175-811B-AF137D171DE3

NORTH FACE OF PILE 3

SOUTH SIDE OF PILE 6

LEFT FACE OF P1-P4 BRACING

NOTES

WORK DEFINED IN THIS DRAWING SHALL BE PERFORMED IN ACCORDANCE WITH - AND PAID FOR UNDER - 'STEEL PILE REPAIRS' AS REFERENCED IN THE PROJECT SPECIAL PROVISIONS.

IMAGES ARE TAKEN FROM SPECIAL INSPECTION REPORT DATED 11/02/2023. PRIOR TO BEGINNING ANY REPAIR WORK, FIELD VERIFY EXISTING CONDITIONS. IF EXISTING CONDITIONS VARY SIGNIFICANTLY FROM IMAGES SHOWN, NOTIFY THE ENGINEER IN WRITING PRIOR TO ORDERING MATERIALS OR BEGINNING REPAIR WORK..

* LOSSES IN EXCESS OF 33% TO THE PILE FLANGES (OR WEBS) SHALL BE DEFINED AS "SIGNIFICANT", PROMPTING REQUIREMENT OF WELDED STEEL PILE REPAIR MATERIAL AS SHOWN. MATERIAL SHALL BE INSTALLED AT DIMENSIONS SHOWN, SUBJECT TO ASSOCIATED LIMITS. RESULTING TOTAL CROSS-SECTIONAL AREA OF ANY REPAIRED FLANGE (OR WEB) SHALL EQUAL OR EXCEED THE AS-FABRICATED FLANGE (OR WEB) AREA PER ORIGINAL PILE DESIGNATION DIMENSIONS.

SURFACE PREPARATION FOR WELDING AND/OR PAINTING: REMOVE RUST, PAINT, AND OTHER CONTAMINANTS DOWN TO BARE STEEL TO SSPC-SP3 STANDARDS. VACUUM-ASSISTED HAND POWER TOOLS SHALL BE USED FOR CAPTURE AND CONTAINMENT OF CONTAMINANTS. SAND BLASTING SHALL NOT BE PERMITTED OVER WATER.

SEE SHEET S1-09 AND S1-10 FOR DETAILS OF THE FRP ENCASEMENT REPAIR DETAILS ON LIFT BENT.

WELDED PLATE REPAIR PROCEDURE NOTES:

1. REMOVE LOOSE RUST AND MARINE GROWTH FROM THE EXISTING STEEL PILE TO OBTAIN A CLEAN, SOUND SURFACE PRIOR TO PERFORMING STEEL REPAIRS AND PILE JACKETING, USING APPROVED MECHANICAL MEANS OR HIGH-PRESSURE WATER BLASTING. IF ADDITIONAL SECTION LOSS GREATER THAN 33% IS FOUND TO THE PILE FLANGES, NOTIFY THE ENGINEER.
2. TACK WELD NEW REPAIR PLATE INTO THE PROPER LOCATION. ENSURE REPAIR PLATE EXTENDS A MINIMUM OF 4" INCHES BEYOND THE DETERIORATED SECTION OF THE PILE FLANGE.
3. WELD NEW REPAIR PLATES. IF A NEW PLATE IS IN CONTACT WITH AN EXISTING REPAIR PLATE, BUTT WELD THE INTERFACE BETWEEN THE TWO PLATES.
4. FOR ANY REPAIRS NOT ENCAPSULATED BY PILE JACKET, PAINT THE EXPOSED STEEL AND CONNECTION COMPONENTS IN THE REPAIR AREA IN ACCORDANCE WITH SECTION 442-12 OF THE STANDARD SPECIFICATIONS, USING PAINT SYSTEM 4 FROM NCDOT'S STRUCTURAL STEEL SHOP COATINGS PROGRAM DOCUMENT, WITH TOPCOAT COLOR MATCHED TO THE EXISTING TOPCOAT COLOR.

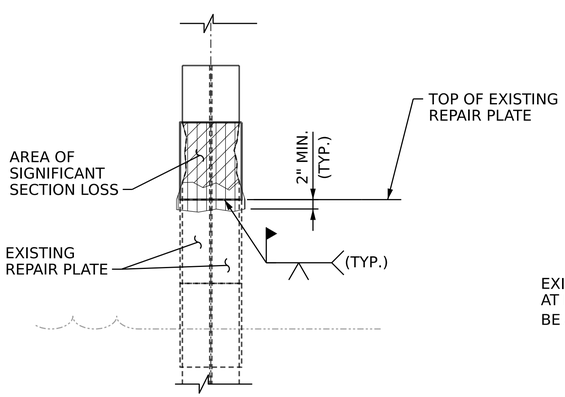

ELEVATION - VIEW

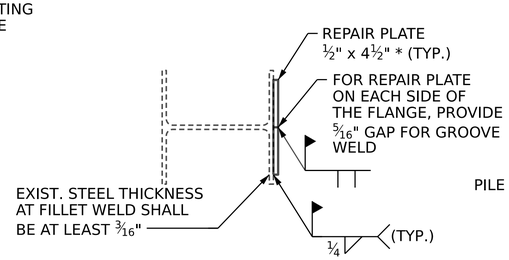

SECTION A-A

HP12x53 STEEL PILE REPAIR DETAILS

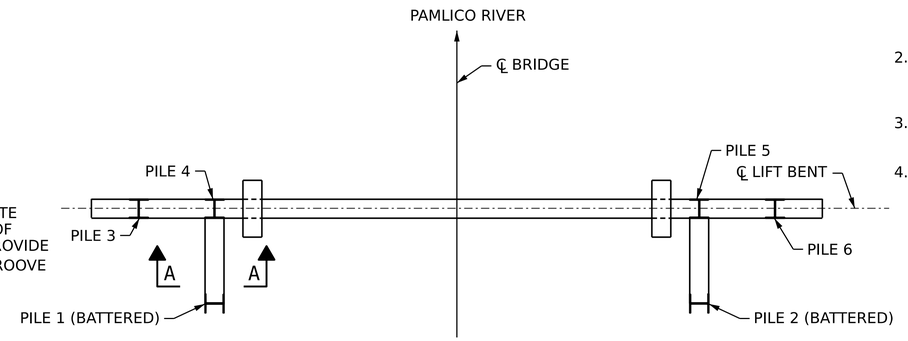

PLAN OF LIFT BENT

ESTIMATED STEEL PILE REPAIR QUANTITIES

BENT NO.	PILE NO.	REPAIR TYPE	DETERIORATION LOCATION	QUANTITY (LBS.)
LIFT BENT	2	WELDED PLATE REPAIR	AT SW FLANGE WATERLINE	26
	3	WELDED PLATE REPAIR	BETWEEN BRACING & WATER LINE	87
	4	WELDED PLATE REPAIR	AT SW FLANGE WATERLINE	72
	5	WELDED PLATE REPAIR	AT SE FLANGE WATERLINE	57
	6	WELDED PLATE REPAIR	BETWEEN BRACING & WATERLINE	41
	P1-P3	WELDED PLATE REPAIR	HORIZONTAL BRACING MEMBER REPAIR	87

PROJECT NO. 15BPR.164
BEAUFORT COUNTY
TERMINAL: AURORA

NORTH CAROLINA PROFESSIONAL SEAL 045005 ENGINEER DAVID KNICKERBOCKER
7/16/2026
DAVID KNICKERBOCKER

STATE OF NORTH CAROLINA
DEPARTMENT OF TRANSPORTATION
RALEIGH

LIFT BENT STEEL PILE REPAIR DETAILS

REVISIONS						
NO.	BY:	DATE:	NO.	BY:	DATE:	
1	--	--	3	--	--	
2	--	--	4	--	--	

SHEET NO. S1-07
TOTAL SHEETS 34

DES BY: B. BINOWSKI	DATE : 11/2025	DWG BY: B. PETERSON	DATE : 11/2025
DES CHK: D. KNICKERBOCKER	DATE : 11/2025	CHK BY: D. KNICKERBOCKER	DATE : 11/2025

HDR Engineering, Inc. of the Carolinas
555 Fayetteville St., Suite 900 Raleigh, N.C. 27601
N.C.B.E.L.S. License Number: F-0116

DOCUMENT NOT CONSIDERED FINAL UNLESS ALL SIGNATURES COMPLETED

Docusign Envelope ID: 500D4102-4BD1-8175-811B-AF137D171DE3

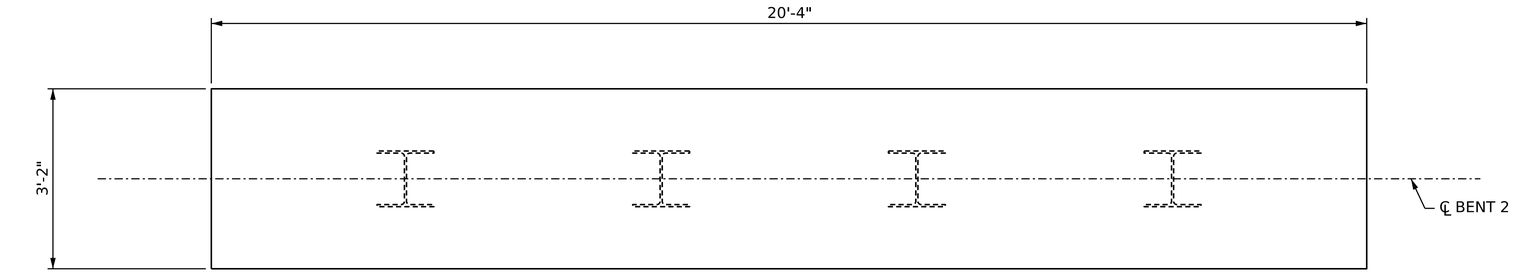

PLAN OF CAP

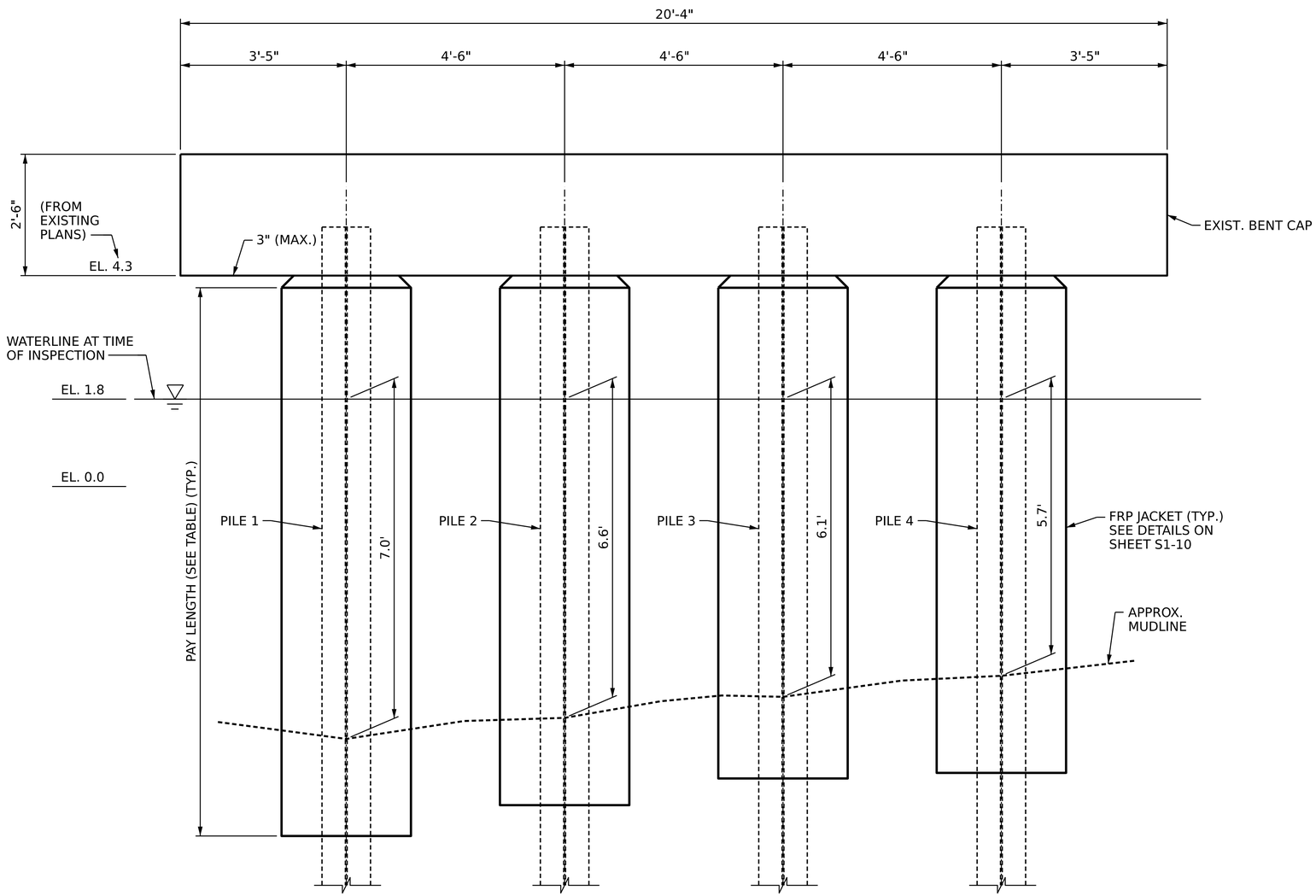

ELEVATION

BAR TYPE

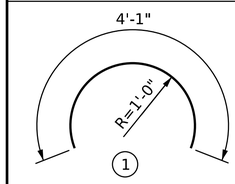

ALL BAR DIMENSIONS ARE OUT-TO-OUT

BILL OF MATERIAL

BAR	NO.	SIZE	TYPE	LENGTH	WEIGHT
* D1	23	#6	STR	1'-4"	69
* V1	8	#6	STR	8'-6"	102
* V2	8	#6	STR	8'-2"	98
* V3	8	#6	STR	7'-8"	92
* V4	8	#6	STR	7'-3"	87
* S1	68	#4	1	4'-1"	185
* EPOXY COATED BARS (LBS.)					
EPOXY COATED REINFORCING STEEL (LBS.)					633
CLASS A CONCRETE (CU. YDS.)					5.3
CONCRETE PILE JACKETS (LIN. FT.)					42.4

PILE JACKET QUANTITY TABLE

DESCRIPTION	PILE NUMBER			
	1	2	3	4
APPROX. PAY LENGTH (FT)	11.25	10.85	10.35	9.95
"V" BAR MARK	V1	V2	V3	V4
NO. OF #6D1 DOWELS	6	6	6	5
NO. OF #4S1 STIRRUP PAIRS	9	9	8	8
CONCRETE FILL (CU. YDS.)	1.4	1.4	1.3	1.2

NOTES

* SOUNDINGS TAKEN FROM UNDERWATER INSPECTION BY CONSOR DATED NOVEMBER 2ND, 2023, AND ARE SHOWN FOR INFORMATION ONLY. CONTRACTOR SHALL FIELD VERIFY MUDLINE ELEVATIONS AND NOTIFY ENGINEER IN WRITING OF ANY DISCREPANCIES PRIOR TO ORDERING MATERIALS OR PERFORMING ANY REPAIR WORK.

BENT DIMENSIONS AND ELEVATIONS ARE APPROXIMATE AND ARE TAKEN FROM EXISTING PLANS.

EXISTING PILES ARE HP12x53 STEEL PILES.

PILE JACKETS SHALL BE EMBEDDED A MINIMUM OF 2'-0" BELOW THE MUDLINE. SEE DETAILS ON SHEET S1-10.

FOR "PILE JACKETS" SEE SPECIAL PROVISIONS.

PILE JACKET LENGTH SHALL NOT BE LESS THAN 4'-0" REGARDLESS OF MUDLINE ELEVATION.

FOR PILE JACKET DETAILS, SEE SHEET S1-10.

PROJECT NO. 15BPR.164
BEAUFORT COUNTY
TERMINAL: AURORA

STATE OF NORTH CAROLINA
DEPARTMENT OF TRANSPORTATION
RALEIGH

BENT 2 PILE JACKET REPAIR DETAILS

NORTH CAROLINA PROFESSIONAL SEAL 045005 ENGINEER DAVID KNICKERBOCKER
7/16/2026
DAVID KNICKERBOCKER

REVISIONS							
NO.	BY:	DATE:	NO.	BY:	DATE:	SHEET NO.	S1-08
1	--	--	3	--	--	TOTAL SHEETS	34
2	--	--	4	--	--		

DES BY: B. BINOWSKI DATE : 11/2025
DES CHK: D. KNICKERBOCKER DATE : 11/2025
DWG BY: B. PETERSON DATE : 11/2025
CHK BY: D. KNICKERBOCKER DATE : 11/2025

HDR Engineering, Inc. of the Carolinas
555 Fayetteville St., Suite 900 Raleigh, N.C. 27601
N.C.B.E.L.S. License Number: F-0116

DOCUMENT NOT CONSIDERED FINAL UNLESS ALL SIGNATURES COMPLETED

Docusign Envelope ID: 500D4102-4BD1-8175-811B-AF137D171DE3

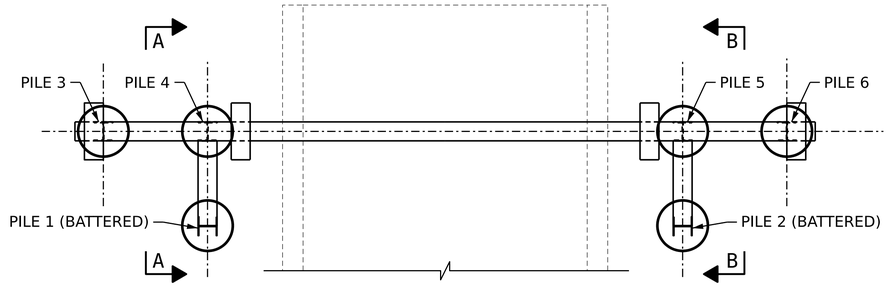

PLAN

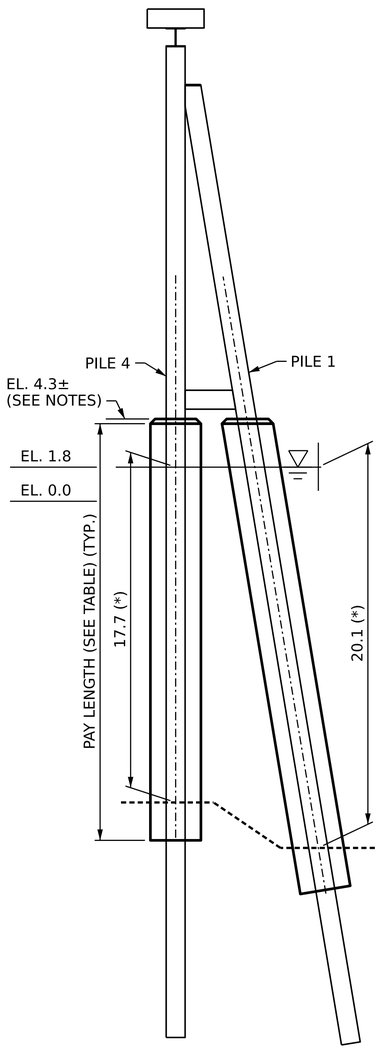

VIEW A-A

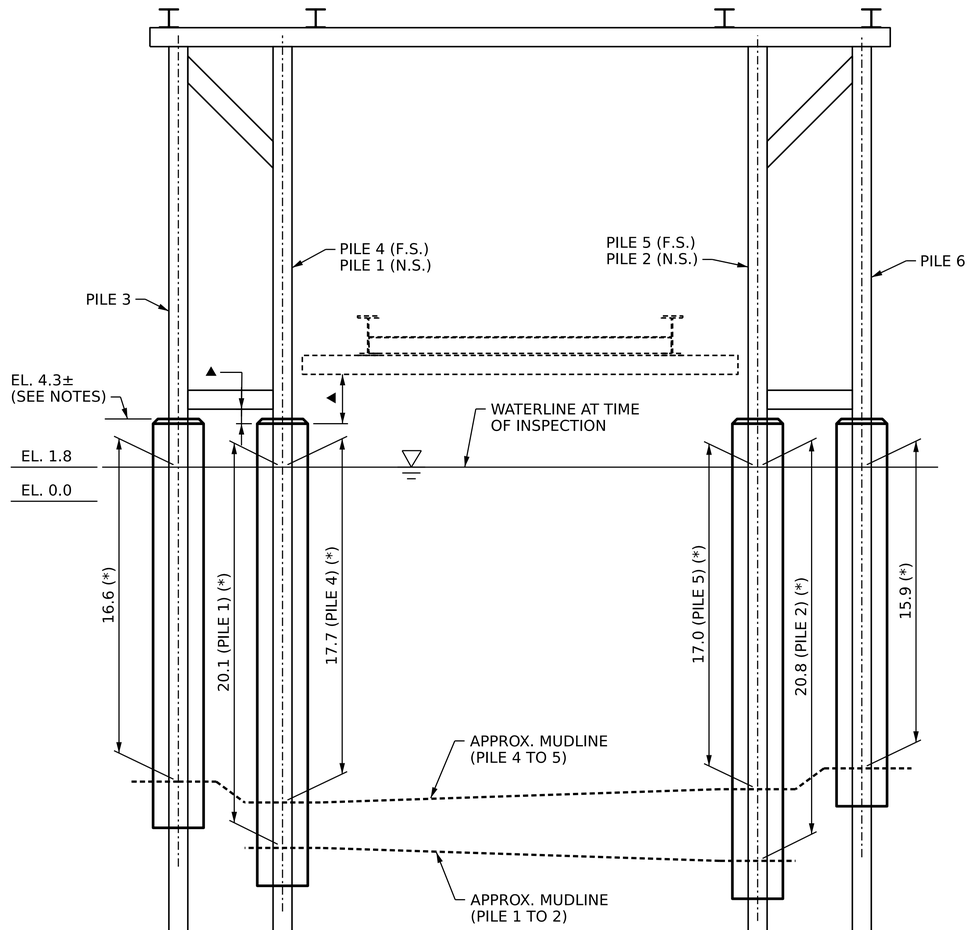

SOUTH ELEVATION

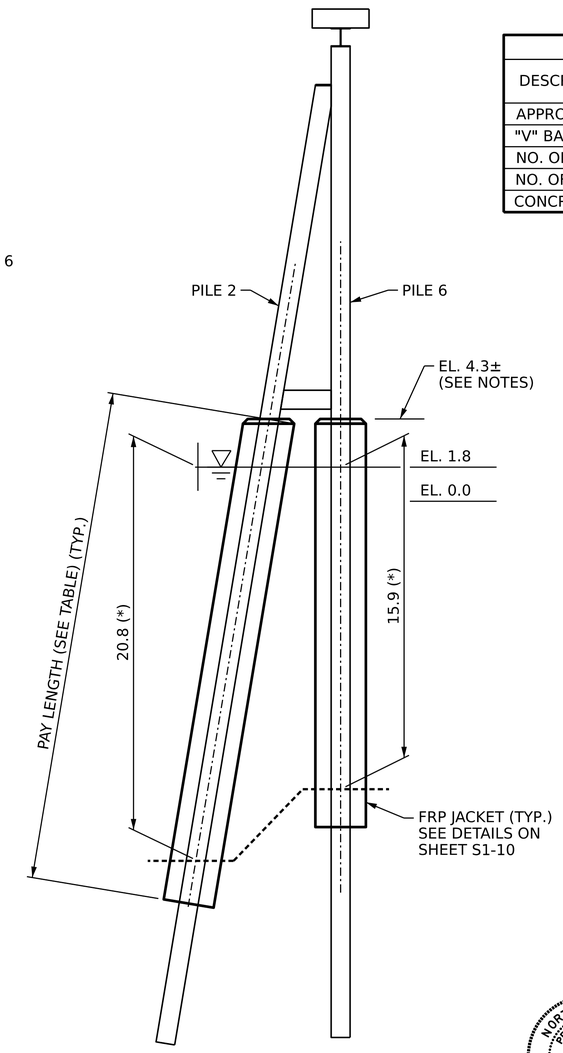

VIEW B-B

BAR TYPE

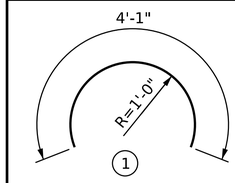

ALL BAR DIMENSIONS ARE OUT-TO-OUT

BILL OF MATERIAL

BAR	NO.	SIZE	TYPE	LENGTH	WEIGHT
* D1	82	#6	STR	2'-0"	246
* V1	8	#6	STR	21'-8"	261
* V2	8	#6	STR	22'-4"	269
* V3	8	#6	STR	18'-2"	219
* V4	8	#6	STR	19'-3"	232
* V5	8	#6	STR	18'-6"	223
* V6	8	#6	STR	17'-5"	210
* S1	242	#4	1	4'-1"	660

* EPOXY COATED BARS

EPOXY COATED REINFORCING STEEL (LBS.)	2320
CLASS A CONCRETE (CU. YDS.)	19.0
CONCRETE PILE JACKETS (LIN. FT.)	133.6

PILE JACKET QUANTITY TABLE

DESCRIPTION	PILE NUMBER					
	1	2	3	4	5	6
APPROX. PAY LENGTH (FT)	24.35	25.05	20.85	21.95	21.25	20.15
"V" BAR MARK	V1	V2	V3	V4	V5	V6
NO. OF #6D1 DOWELS	15	16	13	13	13	12
NO. OF #4S1 STIRRUP PAIRS	22	23	19	20	19	18
CONCRETE FILL (CU. YDS.)	3.5	3.6	3.0	3.1	3.0	2.8

NOTES

* SOUNDINGS TAKEN FROM UNDERWATER INSPECTION (BY CONSOR DATED NOVEMBER 2ND, 2023) ARE PROVIDED FOR INFORMATION ONLY. CONTRACTOR SHALL FIELD VERIFY MUDLINE ELEVATIONS AND NOTIFY ENGINEER IN WRITING OF ANY DISCREPANCIES PRIOR TO ORDERING MATERIALS OR PERFORMING ANY REPAIR WORK.

▲ - THE PROPOSED ELEVATION OF THE TOP OF THE PILE JACKETS SHOWN ON THESE PLANS IS BASED ON EXISTING PLANS DATA. CONTRACTOR SHALL WORK WITH THE ENGINEER AND NCDOT FERRY DIVISION STAFF TO MEASURE THE LOWEST POSITION OF THE STEEL RAMP STRUCTURE DURING OPERATIONS AND SHALL SET THE TOP OF PILE JACKETS TO AVOID INHIBITING OPERATION OF THE STEEL RAMP AND TO AVOID INTERFERENCE WITH THE LIFT BENT BRACING MEMBERS.

BENT DIMENSIONS AND ELEVATIONS ARE APPROXIMATE AND ARE TAKEN FROM EXISTING PLANS.

EXISTING PILES ARE HP12x53 STEEL PILES.

PILE JACKETS SHALL BE EMBEDDED A MINIMUM OF 2'-0" BELOW THE MUDLINE. S EE DETAILS ON SHEET S1-10.

FOR "PILE JACKETS" SEE SPECIAL PROVISIONS.

PILE JACKET LENGTH SHALL NOT BE LESS THAN 4'-0" REGARDLESS OF MUDLINE ELEVATION.

FOR PILE JACKET DETAILS, SEE SHEET S1-10.

PROJECT NO. 15BPR.164

BEAUFORT COUNTY

TERMINAL: AURORA

STATE OF NORTH CAROLINA
DEPARTMENT OF TRANSPORTATION
RALEIGH

LIFT BENT PILE JACKET REPAIR DETAILS

NORTH CAROLINA PROFESSIONAL SEAL 045005 ENGINEER DAVID KNICKERBOCKER
7/16/2026
DAVID KNICKERBOCKER

REVISIONS								SHEET NO.
NO.	BY:	DATE:	NO.	BY:	DATE:			S1-09
1	--	--	3	--	--			TOTAL SHEETS
2	--	--	4	--	--			34

DES BY: B. BINOWSKI	DATE : 11/2025	DWG BY: B. PETERSON	DATE : 11/2025
DES CHK: D. KNICKERBOCKER	DATE : 11/2025	CHK BY: D. KNICKERBOCKER	DATE : 11/2025

HDR Engineering, Inc. of the Carolinas
555 Fayetteville St., Suite 900 Raleigh, N.C. 27601
N.C.B.E.L.S. License Number: F-0116

DOCUMENT NOT CONSIDERED FINAL UNLESS ALL SIGNATURES COMPLETED

Docusign Envelope ID: 500D4102-4BD1-8175-811B-AF137D171DE3

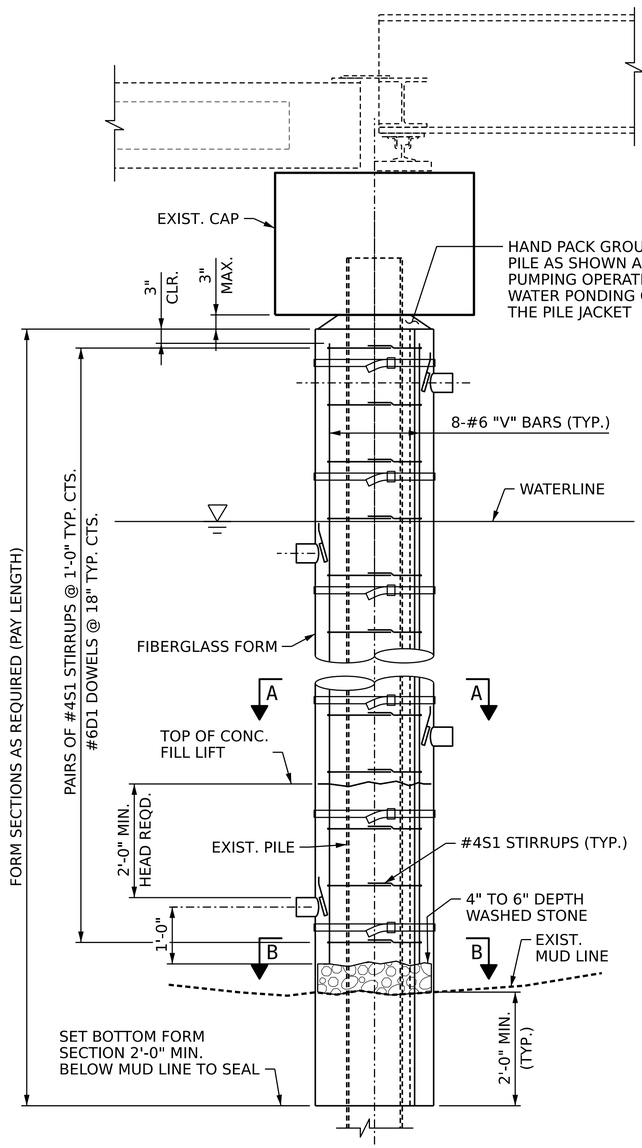

DETAIL AT BENT 2

(FOR CALLOUTS AND DIMENSIONS NOT SHOWN, SEE "DETAIL AT LIFT BENT")

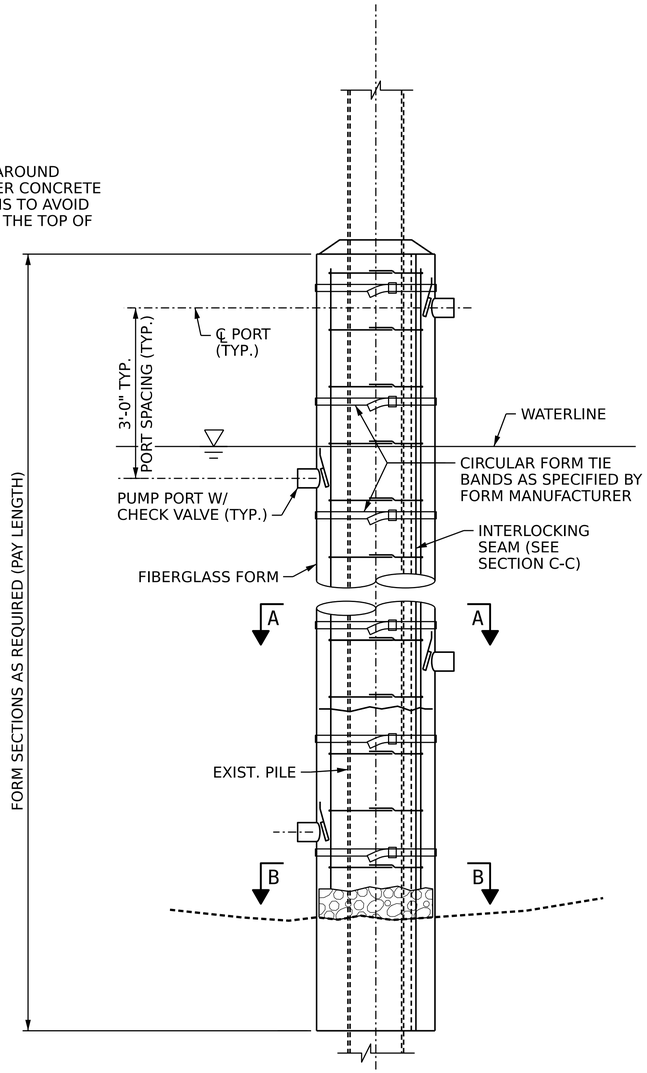

DETAIL AT LIFT BENT

(FOR CALLOUTS AND DIMENSIONS NOT SHOWN, SEE "DETAIL AT BENT BENT 2")

FRP PILE JACKET DETAILS

(STEEL PILE REPAIRS NOT SHOWN)

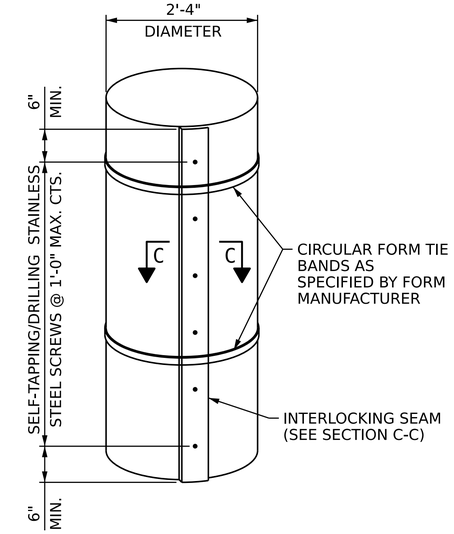

FRP PILE JACKET FORM

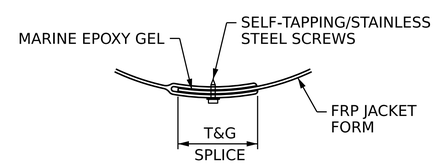

SECTION C-C

INTERLOCKING SEAM DETAIL

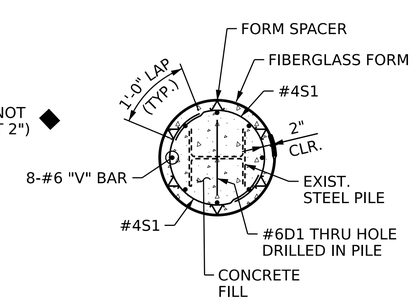

SECTION A-A

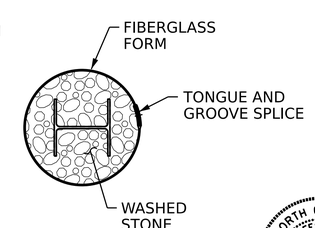

SECTION B-B

JACKET NOTES

FOR PILE JACKETS, SEE SPECIAL PROVISIONS.

CONCRETE AND REINFORCING STEEL SHALL BE IN ACCORDANCE WITH THE REQUIREMENTS OF THE STANDARD SPECIFICATIONS.

ALL REINFORCING STEEL SHALL BE ASTM A615 GRADE 60 AND SHALL BE EPOXY COATED IN ACCORDANCE WITH ASTM A775.

SURFACES OF PILES TO BE ENCASED IN CONCRETE SHALL BE CLEANED AS DESCRIBED IN SPECIAL PROVISIONS. CLEANING MUST BE DONE IMMEDIATELY BEFORE FORMS ARE INSTALLED.

SHOP DRAWINGS SHALL BE SUBMITTED TO THE ENGINEER FOR APPROVAL SHOWING ALL FASTENING DETAILS, STANDOFFS, FORMS AND ANY OTHER DEVICES NECESSARY TO SECURE THE FORMS SO THAT CONCRETE MAY BE PLACED IN A CONTINUOUS OPERATION COMPLETELY ENCAPSULATING THE PILES.

FORMS FOR JACKET SHALL BE INSTALLED IN ACCORDANCE WITH APPROVED SHOP DRAWINGS. BOTTOM SEAL SHALL BE WATER TIGHT.

DETAILS OF PUMP PORTS WITH CHECK VALVE SHALL BE DETERMINED BY SUPPLIER.

CONCRETE AT THE TOP OF THE JACKET SHALL BE DOMED TO PREVENT PONDING. THE INERFACE OF THE PILE AND THE CONCRETE AT THIS LOCATION SHALL BE SEALED WITH AN APPROVED SEALANT.

REPAIR SEQUENCE

1. REMOVE LOOSE RUST AND MARINE GROWTH FROM THE EXISTING STEEL PILE TO OBTAIN A CLEAN, SOUND SURFACE PRIOR TO PERFORMING STEEL REPAIRS AND PILE JACKETING, USING APPROVED MECHANICAL MEANS OR HIGH-PRESSURE WATER BLASTING.
2. COMPLETE STEEL PILE REPAIRS AS SHOWN ON OTHER SHEETS.
3. DETERMINE FIBERGLASS JACKET FORM HEIGHT. MINIMUM HEIGHT IS 2 FT ABOVE AND BELOW CLEAN, SOUND AND CONTAMINANT-FREE SURFACES.
4. BUILD THE REINFORCING BAR CAGE BY PLACING THE #4 STIRRUPS AND VERTICAL REINFORCING STEEL AROUND THE PILE IN ACCORDANCE WITH THE DETAILS.
5. INSTALL FORM SPACERS TO INSURE ADEQUATE CONCRETE COVER AT ALL PARTS OF THE SLEEVE.
6. INSTALL THE FIBERGLASS JACKET FORMS. THE FIBERGLASS JACKET FORMS SHALL COMPLETELY ENCIRCLE THE PILES TO PROVIDE THE CONCRETE COVER AND CLEARANCES AS SHOWN IN SECTION A-A. THE FIBERGLASS JACKET FORMS SHALL BE SIZED TO INCLUDE AN OVERLAPPING FULL HEIGHT INTERLOCKING SEAM. SEE "PILE JACKET JOINT DETAIL".
7. INSERT CONCRETE PUMP HOSE THRU TOP OF JACKET AND EXTEND TO JUST ABOVE THE BOTTOM OF THE FIBERGLASS JACKET FORM. PUMP CONCRETE INTO FORM TO THE DESIRED FILL ELEVATION. IF SITE CONDITIONS PROHIBIT INSERTING PUMP HOSE THRU TOP OF JACKET, THEN INSTALL PUMP PORTS ALONG HEIGHT OF JACKET AS REQUIRED AND PLACE CONCRETE AS SHOWN IN THE DETAILS.
8. INSTALL PUMP PORTS IN JACKET AS REQUIRED FOR UNDERWATER APPLICATIONS. PORTS SHOULD HAVE A CHECK VALVE TO PREVENT BACK FLOW OF CONCRETE ONCE PUMP NOZZLE IS REMOVED. FOR CONCRETE PLACEMENTS GREATER THAN 5 FT HIGH USE MULTIPLE PORTS SPACED 3 FT VERTICALLY AND ALTERNATING 180 DEGREES FROM PREVIOUS PORT. A MINIMUM OF 2 FT OF CONCRETE HEAD IS NEEDED ABOVE PORT PRIOR TO CHANGING PORTS.

PROJECT NO. 15BPR.164

BEAUFORT COUNTY

TERMINAL: AURORA

STATE OF NORTH CAROLINA
DEPARTMENT OF TRANSPORTATION
RALEIGH

FRP PILE JACKET DETAILS

NORTH CAROLINA PROFESSIONAL SEAL 045005 ENGINEER DAVID KNICKERBOCKER 7/16/2026

DAVID KNICKERBOCKER

HDR Engineering, Inc. of the Carolinas
555 Fayetteville St., Suite 900 Raleigh, N.C. 27601
N.C.B.E.L.S. License Number: F-0116

DOCUMENT NOT CONSIDERED FINAL UNLESS ALL SIGNATURES COMPLETED

REVISIONS						
NO.	BY:	DATE:	NO.	BY:	DATE:	
1	--	--	3	--	--	
2	--	--	4	--	--	

SHEET NO. S1-10

TOTAL SHEETS 34

DES BY: B. BINOWSKI	DATE : 11/2025	DWG BY: B. PETERSON	DATE : 11/2025
DES CHK: D. KNICKERBOCKER	DATE : 11/2025	CHK BY: D. KNICKERBOCKER	DATE : 11/2025

Docusign Envelope ID: 500D4102-4BD1-8175-811B-AF137D171DE3

MECHANICAL SCOPE OF WORK

THE SCOPE OF WORK OF THIS PROJECT SHALL INCLUDE BUT NOT BE LIMITED TO:

1. FIELD SURVEY AND VERIFICATION
   a. THE CONTRACTOR SHALL PERFORM A FIELD SURVEY TO DETERMINE ALL EXISTING DIMENSIONS OF THE RAMP AND APPROACHES TO LOCATE ALL MECHANICAL EQUIPMENT TO BE REPAIRED OR REPLACED. THE FIELD SURVEY SHALL BE CONSIDERED INCIDENTAL TO THE LUMP SUM RAMP MECHANICAL SYSTEM REPAIR PAY ITEM.
2. HYDRAULIC EQUIPMENT
   a. REPLACEMENT OF CORRODED HYDRAULIC FITTINGS AND TUBING.
   b. REPLACEMENT OF CORRODED HYDRAULIC TUBING SUPPORTS WITH SECTION LOSS EXCEEDING 20%.
   c. FLUSHING OF THE HYDRAULIC SYSTEM.
   d. REPLACEMENT OF THE HYDRAULIC FLUID FILTERS.

GENERAL MECHANICAL NOTES

SEE SPECIAL PROVISIONS FOR ADDITIONAL DETAILS, INFORMATION, AND REQUIREMENTS RELATED TO THE WORK INDICATED ON THESE PLANS.

MODEL NUMBERS AND DETAILS OF STANDARD COMPONENTS ARE BASED ON MANUFACTURERS CATALOG DATA CURRENT TO THE TIME THE DRAWINGS WERE PREPARED. THE MODELS SPECIFIED ARE ONLY TO ESTABLISH A STANDARD FOR QUALITY AND TO DEFINE PERFORMANCE REQUIREMENTS. EQUIVALENT MODELS FROM OTHER MANUFACTURERS MAY BE SUBSTITUTED AT THE OPTION OF THE CONTRACTOR AND WITH THE APPROVAL OF THE ENGINEER.

ALL FASTENER SIZES SHALL BE VERIFIED. FASTENERS SHALL BE TENSIONED IN ACCORDANCE WITH NCDOT STANDARD SPECIFICATIONS FOR ROADS AND STRUCTURES SECTION 440-8.

ALL HOLES SHALL BE DRILLED FULL SIZED UNLESS NOTED OTHERWISE.

ALL HARDWARE NOTED AS STAINLESS STEEL (SS) SHALL BE TYPE 316.

IT SHALL BE THE CONTRACTORS RESPONSIBILITY TO COORDINATE AND VERIFY THE RELATIONSHIP AND ASSEMBLY OF ALL PARTS FOR A COMPLETE WORKING SYSTEM. ALL REQUIRED MACHINING, RIGGING, LUBRICATION, PAINTING, TESTING AND ASSEMBLY SHALL BE CONSIDERED PART OF THE WORK.

ALL WORK SHALL BE DONE WITH NO INTERFERENCE TO FACILITY OPERATIONS UNLESS AUTHORIZED BY THE DEPARTMENT IN ADVANCE.

THE CONTRACTOR SHALL BE RESPONSIBLE FOR COORDINATING RAMP OPERATIONS WITH NCDOT FOR ALL WORK THAT REQUIRES SHUT DOWN OF THE MECHANICAL OPERATING SYSTEMS (EG. HYDRAULIC TUBE AND FITTING REPLACEMENT). THE BRIDGE CAN BE MANUALLY OPERATED VIA ELECTRIC HOISTS CURRENTLY ON-SITE. OPERATION VIA ELECTRIC HOISTS SHALL BE COORDINATED WITH THE DEPARTMENT INCLUDING THE NUMBER AND DURATION OF ALL MECHANICAL SYSTEM OUTAGES.

THE CONTRACTOR SHALL BE RESPONSIBLE FOR MINIMIZING LEAKAGE THROUGHOUT THE PERFORMANCE OF THE WORK. THE CONTRACTOR SHALL DOCUMENT THE HPU FLUID LEVEL PRIOR TO THE START OF WORK AND SHALL BE RESPONSIBLE FOR MAINTAINING THAT LEVEL OR BETTER FOR THE DURATION OF THE WORK.

THE CONTRACTOR SHALL PROVIDE A SPILL PREVENTION, CONTROL AND COUNTERMEASURE (SPCC) PLAN FOR REVIEW AND APPROVAL.

AFTER COMPLETION OF THE MECHANICAL WORK AND PRIOR TO FINAL ACCEPTANCE, THE HYDRAULIC FLUID SHALL BE TESTED AND CLEANED TO A MINIMUM CLEANLINESS LEVEL OF ISO 16/14/12 AND ALL FILTERS FOR THE RAMP HYDRAULIC SYSTEM SHALL BE REPLACED AND SHALL HAVE THE REPLACEMENT DATE CLEARLY INDICATED ON THE FILTER.

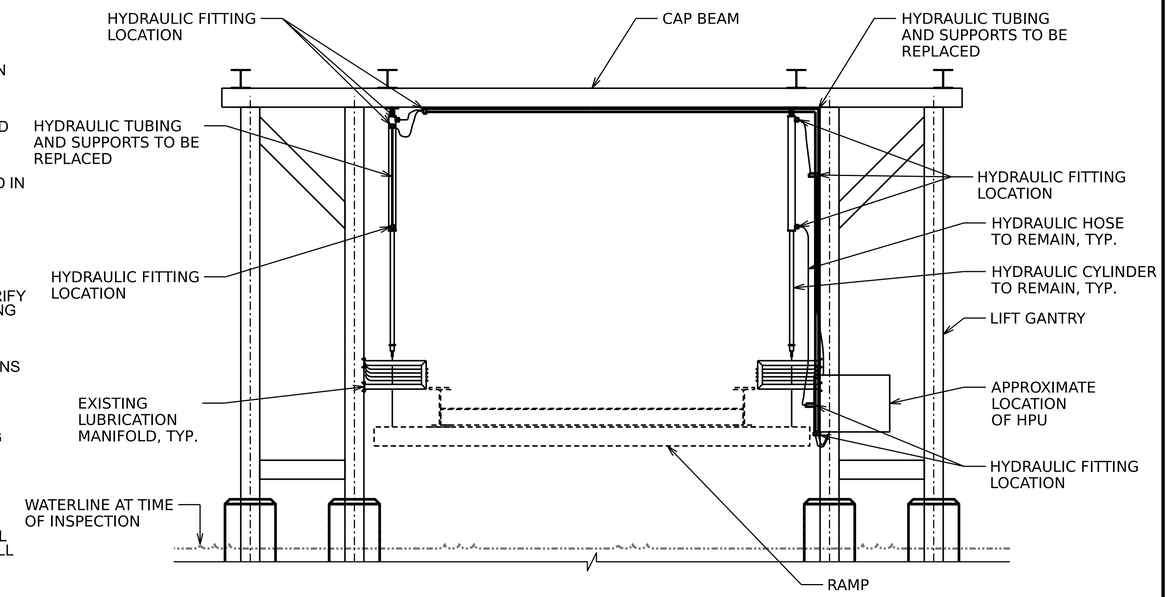

HYDRAULIC REPAIRS ELEVATION

LOOKING NORTH
SEE HYDRAULIC REPAIRS DETAIL SHEET FOR INFORMATION ON REPAIR REQUIREMENTS
LOCATIONS OF EXISTING HYDRAULIC EQUIPMENT SHOWN ARE APPROXIMATE

ESTIMATED SUMMARY OF QUANTITIES	
HYDRAULIC TUBING	LIN. FT.: 90
HYDRAULIC FITTINGS	NO.: 12

ESTIMATED QUANTITIES ARE PROVIDED FOR BIDDING PURPOSES. ACTUAL QUANTITIES SHALL BE DETERMINED BY THE CONTRACTOR AND SHALL BE INCLUDED WITHIN THE LUMP SUM PAY ITEM "RAMP MECHANICAL REPAIR WORK".

PROJECT NO. 15BPR.164
BEAUFORT COUNTY
TERMINAL: AURORA

STATE OF NORTH CAROLINA
DEPARTMENT OF TRANSPORTATION
RALEIGH

NORTH CAROLINA PROFESSIONAL SEAL 062123 ENGINEER STEPHEN GRABOWSKI
7/16/2026
Stephen Grabowski

MECHANICAL NOTES

REVISIONS							SHEET NO.
NO.	BY:	DATE:	NO.	BY:	DATE:		M1-01
1	--	--	3	--	--		TOTAL SHEETS
2	--	--	4	--	--		34

HDR Engineering, Inc. of the Carolinas
555 Fayetteville St., Suite 900 Raleigh, N.C. 27601
N.C.B.E.L.S. License Number: F-0116

DOCUMENT NOT CONSIDERED FINAL UNLESS ALL SIGNATURES COMPLETED

DES BY: C. MORRIS	DATE : 11/2025	DWG BY: B. PETERSON	DATE : 11/2025
DES CHK: S. GRABOWSKI	DATE : 11/2025	CHK BY: S. GRABOWSKI	DATE : 11/2025

Docusign Envelope ID: 500D4102-4BD1-8175-811B-AF137D171DE3

CORRODED HYDRAULIC FITTINGS

ERRANT GREASE LINE

CORRODED TUBING SUPPORTS

NOTES

1. THE CONTRACTOR SHALL SUBMIT HYDRAULIC TUBING AND GREASE LINE SUPPORTS AND FITTINGS TO THE ENGINEER FOR REVIEW AND APPROVAL. SEE SPECIFICATIONS FOR REQUIREMENTS.
2. IMAGES PROVIDED SERVE AS VISUAL EXAMPLES AND SHOULD NOT BE CONSIDERED A COMPLETE CATALOG OF ALL REPAIR LOCATIONS.
3. WHERE HYDRAULIC TUBING SUPPORT MOUNTING INTERFERES WITH EXISTING BEAM GEOMETRY, SUPPORTS MAY BE STAGGERED TO ALLOW INSTALLATION CLEARANCE.

KEY NOTES

1. REPLACE ALL CORRODED HYDRAULIC FITTINGS.
2. REPLACE ALL HYDRAULIC TUBING SUPPORTS AND FASTENERS WITH SECTION LOSS BEYOND 20%. SUPPORT AT MAXIMUM EVERY 54".
3. REPLACE ALL HYDRAULIC TUBING. SEE SPECIFICATIONS FOR REQUIREMENTS.
4. SECURE ERRANT GREASE LINE IN CONTACT WITH THE EAST SIDE WIRE ROPE.

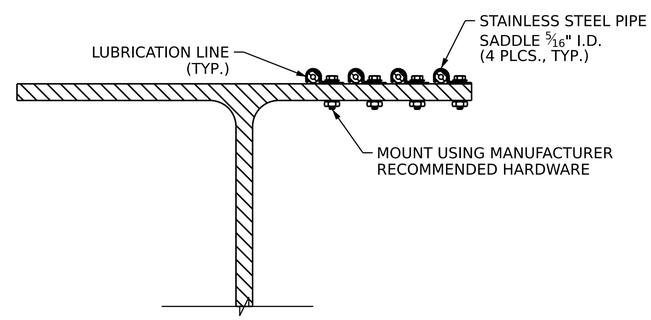

TYPICAL LUBRICATION LINE SUPPORT DETAIL

LUBRICATION LINE LOCATIONS SHOWN ARE APPROXIMATE

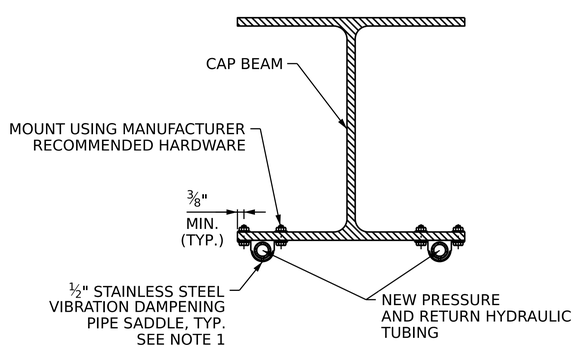

TYPICAL HYDRAULIC TUBING SUPPORT DETAIL

HYDRAULIC TUBING LOCATIONS SHOWN ARE APPROXIMATE

PROJECT NO. 15BPR.164

BEAUFORT COUNTY

TERMINAL: AURORA

STATE OF NORTH CAROLINA
DEPARTMENT OF TRANSPORTATION
RALEIGH

HYDRAULIC AND LUBRICATION REPAIR DETAILS

NORTH CAROLINA PROFESSIONAL SEAL 062123 ENGINEER STEPHEN GRABOWSKI

7/16/2026

Stephen Grabowski

HDR Engineering, Inc. of the Carolinas
555 Fayetteville St., Suite 900 Raleigh, N.C. 27601
N.C.B.E.L.S. License Number: F-0116

DOCUMENT NOT CONSIDERED FINAL UNLESS ALL SIGNATURES COMPLETED

REVISIONS								SHEET NO.
NO.	BY:	DATE:	NO.	BY:	DATE:			M1-02
1	--	--	3	--	--			TOTAL SHEETS
2	--	--	4	--	--			34

DES BY: C. MORRIS	DATE : 11/2025	DWG BY: B. PETERSON	DATE : 11/2025
DES CHK: S. GRABOWSKI	DATE : 11/2025	CHK BY: S. GRABOWSKI	DATE : 11/2025

Docusign Envelope ID: 500D4102-4BD1-8175-811B-AF137D171DE3

GENERAL ELECTRICAL NOTES

ALL WORK FOR THIS CONTRACT SHALL CONFORM TO REQUIREMENTS OF NFPA-70 (NATIONAL ELECTRICAL CODE), NFPA-70E, NFPA 502, AASHTO LRFD MOVABLE HIGHWAY BRIDGE DESIGN SPECIFICATIONS. SEE SPECIAL PROVISION FOR A LIST OF ALL APPLICABLE STANDARDS.

ALL WORK SHALL BE DONE WITH NO INTERFERENCE TO FACILITY OPERATIONS UNLESS AUTHORIZED BY THE DEPARTMENT IN ADVANCE.

THROUGHOUT CONSTRUCTION, THE CONTRACTOR SHALL ENSURE THAT THE RAMP REMAINS OPERATIONAL TO VEHICULAR TRAFFIC AT ALL TIMES. DURING AN ELECTRICAL OUTAGE, THE BRIDGE MAY BE OPERATED MANUALLY VIA ELECTRIC CHAIN HOISTS. OPERATION VIA ELECTRIC HOISTS SHALL BE COORDINATED WITH THE DEPARTMENT INCLUDING THE NUMBER AND DURATION OF ALL ELECTRICAL SYSTEM OUTAGES.

SOME IMAGES ARE TAKEN FROM INSPECTION REPORT DATED 11/02/2023. PRIOR TO BEGINNING ANY REPAIR WORK, FIELD VERIFY EXISTING CONDITIONS. IF EXISTING CONDITIONS VARY SIGNIFICANTLY FROM IMAGES SHOWN, CONTACT DEPARTMENT.

IMAGES PROVIDED SERVE AS VISUAL EXAMPLES AND SHOULD NOT BE CONSIDERED A COMPLETE CATALOG OF ALL INSPECTION DISCREPANCIES.

ALL CONDUITS, CONDUCTORS, AND SUPPORTS RELATED TO EQUIPMENT BEING REMOVED, SHALL ALSO BE REMOVED.

THE CONTRACTOR SHALL CONDUCT OPERATIONS IN SUCH A MANNER THAT NO WASTE, DUST, DEBRIS OR OTHER DETRIMENTAL MATERIAL SHALL ENTER THE WATER IN ACCORDANCE WITH SECTION 107 OF NCDOT'S ROADS AND STRUCTURE SPECIFICATIONS.

AT THIS TIME THERE ARE NO AS-BUILTS FOR THE EXISTING SYSTEM. ALL ITEMS SHALL BE FIELD VERIFIED BY THE CONTRACTOR, AS REQUIRED.

ALL ELECTRICAL BOXES/ENCLOSURES/CABINETS SHALL BE STAINLESS STEEL NEMA 4X.

ALL ELECTRICAL PANELBOARDS SHALL BE NEMA 12 OR R3 AND SHALL BE LOCATED INSIDE STAINLESS STEEL NEMA 4X ENCLOSURE.

ALL STAINLESS STEEL EQUIPMENT SHALL BE 316 STAINLESS STEEL UNLESS OTHERWISE NOTED.

BLACK ENGRAVED LAMACOID LABELS SHALL BE PROVIDED FOR ALL INTERIOR CABINET/BOX/ENCLOSURE DEVICES.

THE CONTRACTOR SHALL PROVIDE A STAINLESS STEEL NAMEPLATE FOR THE FRONT OF EACH CABINET/BOX/ENCLOSURE THAT IS MODIFIED OR CONNECTED TO REGARDLESS IF AN EXISTING NAMEPLATE IS PRESENT. IF AN EXISTING NAMEPLATE EXISTS IT SHALL BE REPLACED.

THE CONTRACTOR SHALL RE RUN ANY CONDUITS AND CONDUCTORS AS REQUIRED THAT CANNOT BE EASILY REPAIRED OR CONNECTED TO NEW EQUIPMENT AT NO ADDITIONAL COST TO THE DEPARTMENT.

ELECTRICAL SCOPE OF WORK

THE SCOPE OF WORK FOR THIS PROJECT SHALL INCLUDE BUT NOT LIMITED TO THE REPAIR, TESTING AND COMMISSIONING OF THE ELECTRICAL FERRY RAMP:

1. FIELD SURVEY AND VERIFICATION
   a. THE CONTRACTOR SHALL CONDUCT FIELD VERIFICATIONS OF ALL FIELD EQUIPMENT TO VERIFY CONDITIONS, AS REQUIRED, TO PERFORM REPAIRS. THIS INCLUDES BUT NOT LIMITED TO THE EXISTING CONDUIT, CONDUCTORS, CONDUCTOR LABELS, AND CONTRACT PLANS.
2. LIGHTING
   a. THE CONTRACTOR SHALL FURNISH AND INSTALL NEW LIGHTING FIXTURES.
3. CONDUIT AND WIRING
   a. THE CONTRACTOR SHALL FURNISH AND INSTALL, AS REQUIRED, CONDUIT, BOXES, AND CONDUCTORS AND ALL OTHER NEW EQUIPMENT SPECIFIED IN THE PLANSET.
   b. THE CONTRACTOR SHALL FULLY INTEGRATE ALL ELECTRICAL REPAIRS INTO THE EXISTING/REMAINING ELECTRICAL SYSTEMS.
4. TESTING AND COMMISSIONING
   a. FOLLOWING INSTALLATION, THE CONTRACTOR SHALL COMMISSION AND TEST TO SHOW THAT EQUIPMENT IS INSTALLED ACCURATELY AND SAFELY. ALL EQUIPMENT SHALL BE OPERATED TO THE SATISFACTION OF THE ENGINEER AND A TESTING PROCEDURE SHALL BE SUBMITTED TO RECORD THE TESTING OF ALL EQUIPMENT.

PROJECT NO. 15BPR.164
BEAUFORT COUNTY
TERMINAL: AURORA

STATE OF NORTH CAROLINA
DEPARTMENT OF TRANSPORTATION
RALEIGH

ELECTRICAL GENERAL NOTES

NORTH CAROLINA PROFESSIONAL SEAL 060158 ENGINEER DRAKE J. COLE
7/16/2026
DRAKE COLE

REVISIONS						SHEET NO.
NO.	BY:	DATE:	NO.	BY:	DATE:	E1-01
1	--	--	3	--	--	TOTAL SHEETS
2	--	--	4	--	--	34

HDR Engineering, Inc. of the Carolinas
555 Fayetteville St., Suite 900 Raleigh, N.C. 27601
N.C.B.E.L.S. License Number: F-0116

DOCUMENT NOT CONSIDERED FINAL UNLESS ALL SIGNATURES COMPLETED

DES BY: M. TORRES	DATE : 11/2025	DWG BY: B. PETERSON	DATE : 11/2025
DES CHK: D. COLE	DATE : 11/2025	CHK BY: D. COLE	DATE : 11/2025

Docusign Envelope ID: 500D4102-4BD1-8175-811B-AF137D171DE3

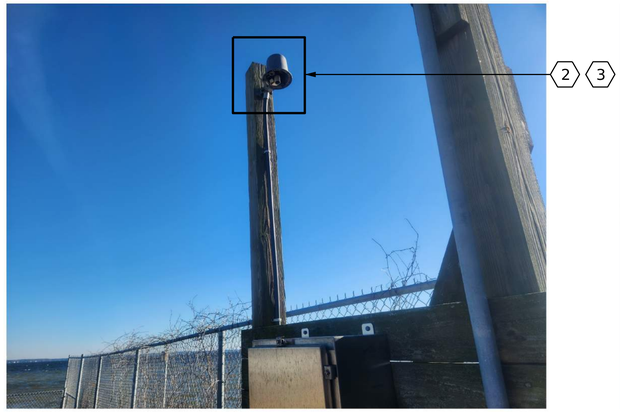

UTILITY PEDESTAL BROKEN LIGHT FIXTURE

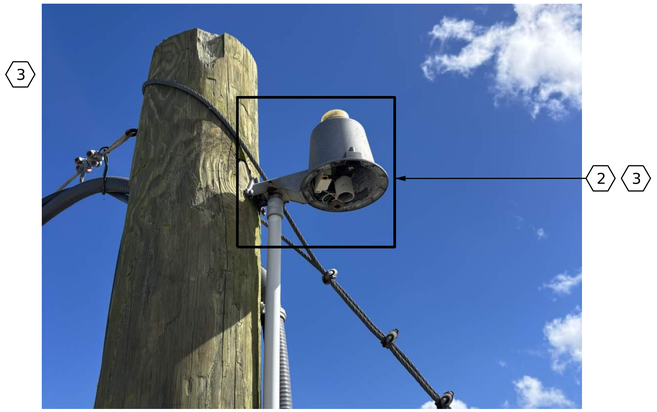

MESSENGER CABLE SUPPORT/LIGHT POLE BROKEN LIGHTING FIXTURE

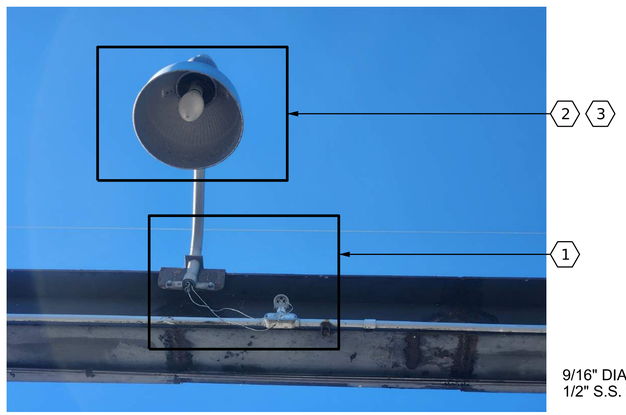

LIGHT ELECTRICAL WIRES NOT IN CONDUIT

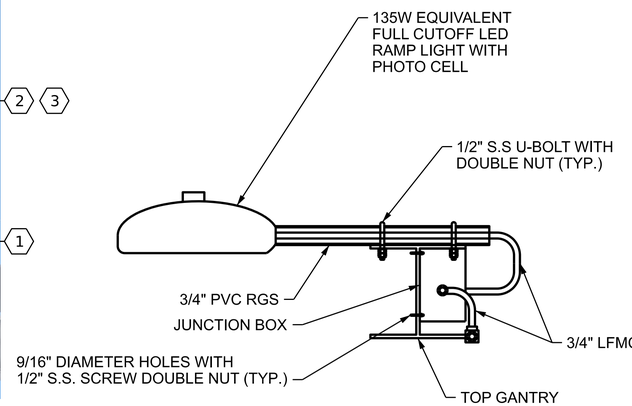

LED RAMP LIGHT DETAIL

KEY NOTES

1. THE CONTRACTOR SHALL REMOVE THE EXISTING WEATHER HEAD AND INSTALL A NEW NEMA 4X STAINLESS STEEL JUNCTION BOX TO CONNECT TO THE EXISTING CONDUIT. LFMC CONDUIT OR APPROVED EQUAL SHALL BE USED TO CONNECT JUNCTION BOX TO LUMINAIRE.
2. THE CONTRACTOR SHALL DISCONNECT, DEMOLISH, AND REMOVE THE EXISTING LIGHTING FIXTURE. THE CONTRACTOR SHALL INSTALL NEW LED FLOOD LIGHT MODEL 53XH22 FROM AMERICAN ELECTRIC OR APPROVED EQUAL.
3. REPLACEMENT LIGHTING TO PROVIDE A MINIMUM OF 15 FC ON THE FERRY RAMP. THE CONTRACTOR IS RESPONSIBLE TO ORIENT THE FIXTURE AS REQUIRED.

PROJECT NO. 15BPR.164
BEAUFORT COUNTY
TERMINAL: AURORA

STATE OF NORTH CAROLINA
DEPARTMENT OF TRANSPORTATION
RALEIGH

AREA LIGHTING REPAIR DETAILS

NORTH CAROLINA PROFESSIONAL SEAL 060158 ENGINEER DRAKE J. COLE
7/16/2026
DRAKE COLE

REVISIONS						SHEET NO.
NO.	BY:	DATE:	NO.	BY:	DATE:	E1-02
1	--	--	3	--	--	TOTAL SHEETS
2	--	--	4	--	--	34

DES BY: M. TORRES	DATE : 11/2025	DWG BY: B. PETERSON	DATE : 11/2025
DES CHK: D. COLE	DATE : 11/2025	CHK BY: D. COLE	DATE : 11/2025

HDR Engineering, Inc. of the Carolinas
555 Fayetteville St., Suite 900 Raleigh, N.C. 27601
N.C.B.E.L.S. License Number: F-0116

DOCUMENT NOT CONSIDERED FINAL UNLESS ALL SIGNATURES COMPLETED

Docusign Envelope ID: 500D4102-4BD1-8175-811B-AF137D171DE3

EAST RAMP PROFILE CONDUIT SUPPORTS

EAST PROFILE BENT 1 GATE RAILING CONDUIT SUPPORT

EAST PROFILE END BENT RAILING CONDUIT SUPPORT

EAST PROFILE RAMP JUNCTION BOX BROKEN OFF CONDUIT

CONDUCTOR HELD BY ZIP TIES TO CONDUIT

NOTES

1. CONDUITS SHALL BE SUPPORTED A MINIMUM OF EVERY 6'.

KEY NOTES

1. THE CONTRACTOR SHALL REMOVE ANY BROKEN/MISSING/UNIFORMLY CORRODED/ZIP-TIED CONDUIT SUPPORTS AND REPLACE WITH 2 HOLE OR 1 HOLE CONDUIT STRAPS, AS REQUIRED. NEW CONDUIT SUPPORTS SHALL BE INSTALLED, AS REQUIRED. CONTRACTOR SHALL ONLY UTILIZE ONE HOLE STRAPS WHERE PREVIOUSLY USED.
2. THE CONTRACTOR SHALL REMOVE ANY BROKEN/MISSING/UNIFORMLY CORRODED/ZIP-TIED CONDUIT SUPPORTS AND REPLACE WITH STAINLESS STEEL CONDUIT CLAMPS, AS REQUIRED. NEW CONDUIT SUPPORTS SHALL BE INSTALLED, AS REQUIRED.
3. THE CONTRACTOR SHALL CLEAN GALVANIZED STEEL CONDUIT COUPLING/FITTINGS PER SSPC-SP2 AND RECOAT WITH GALVANIZING SPRAY.
4. THE CONTRACTOR SHALL REPLACE BROKEN AND/OR DAMAGED CONDUIT WITH LFMC OR APPROVED EQUAL CONDUIT TYPE, AS REQUIRED.
5. THE CONTRACTOR SHALL REPLACE BROKEN/DAMAGED PLASTIC JUNCTION BOX ENCLOSURES WITH APPROVED NEMA 4X TYPE ENCLOSURES, AS REQUIRED. NEW ENCLOSURE SHALL HAVE APPROPRIATELY SIZED CONDUIT AND CONDUCTOR CONNECTIONS ARE TO BE RE-UTILIZED.

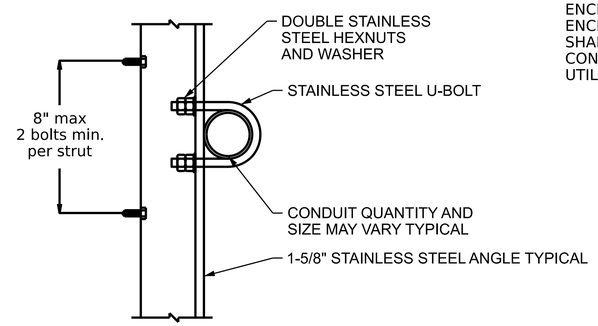

TYPICAL STEEL CONDUIT MOUNTING DETAIL

PROJECT NO. 15BPR.164
BEAUFORT COUNTY
TERMINAL: AURORA

STATE OF NORTH CAROLINA
DEPARTMENT OF TRANSPORTATION
RALEIGH

CONDUIT REPAIR DETAILS

NORTH CAROLINA PROFESSIONAL SEAL 060158 ENGINEER DRAKE J. COLE
7/16/2026
DRAKE COLE

HDR Engineering, Inc. of the Carolinas
555 Fayetteville St., Suite 900 Raleigh, N.C. 27601
N.C.B.E.L.S. License Number: F-0116

DOCUMENT NOT CONSIDERED FINAL UNLESS ALL SIGNATURES COMPLETED

REVISIONS						
NO.	BY:	DATE:	NO.	BY:	DATE:	
1	--	--	3	--	--	
2	--	--	4	--	--	

SHEET NO. E1-03
TOTAL SHEETS 34

DES BY: M. TORRES	DATE : 11/2025	DWG BY: B. PETERSON	DATE : 11/2025
DES CHK: D. COLE	DATE : 11/2025	CHK BY: D. COLE	DATE : 11/2025

Docusign Envelope ID: 500D4102-4BD1-8175-811B-AF137D171DE3

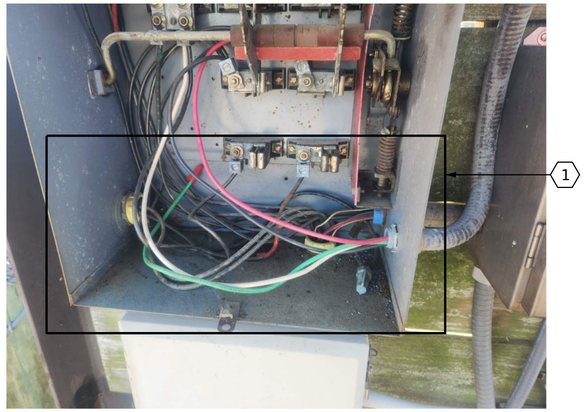

DEBRIS IN MTS CABINET

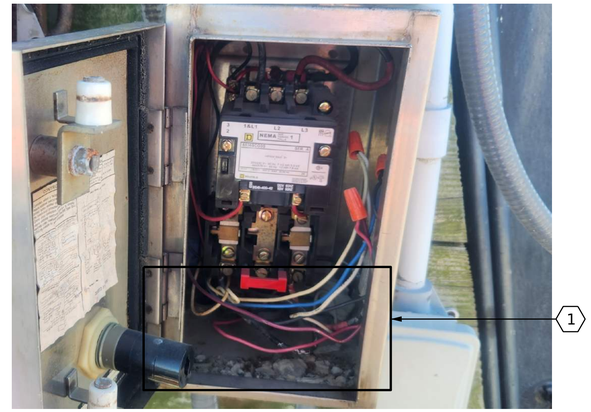

DEBRIS IN HPU MOTOR STARTER JUNCTION BOX

UNLABELED JUNCTION BOX LOCATED ON ELECTRICAL PEDESTAL

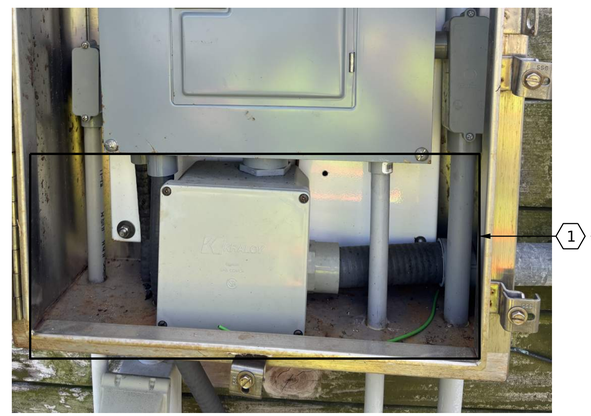

UNTERMINATED GROUND WIRE LOCATED INSIDE PANELBOARD CABINET

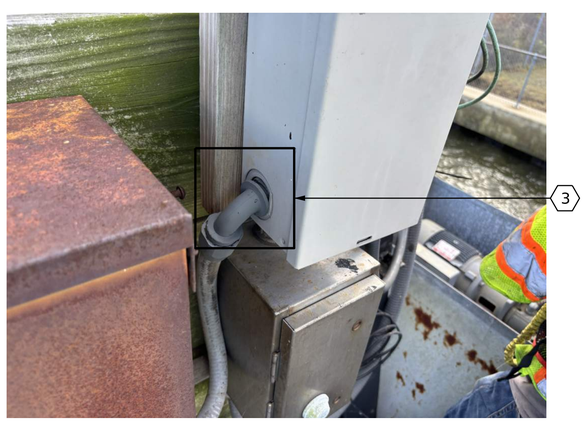

UNLABELED JUNCTION BOX LOCATED ON ELECTRICAL PEDESTAL

KEY NOTES

1. THE CONTRACTOR SHALL CLEAN AND REMOVE DEBRIS FROM THE INTERIOR OF BOXES/ENCLOSURES/CABINETS.
2. THE CONTRACTOR SHALL INSTALL A GROUND TERMINAL BLOCK TO TERMINATE GROUND CONDUCTORS.
3. THE CONTRACTOR SHALL ENSURE CONDUIT FITTING IS SECURELY INSTALLED IN JUNCTION BOX AND SHALL BE REPAIRED OR REPLACED AS REQUIRED.

PROJECT NO. 15BPR.164

BEAUFORT COUNTY

TERMINAL: AURORA

STATE OF NORTH CAROLINA
DEPARTMENT OF TRANSPORTATION
RALEIGH

JUNCTION BOX REPAIR DETAILS

NORTH CAROLINA PROFESSIONAL SEAL 060158 ENGINEER DRAKE J. COLE
7/16/2026
DRAKE COLE

REVISIONS						SHEET NO.
NO.	BY:	DATE:	NO.	BY:	DATE:	E1-04
1	--	--	3	--	--	TOTAL SHEETS
2	--	--	4	--	--	34

HDR Engineering, Inc. of the Carolinas
555 Fayetteville St., Suite 900 Raleigh, N.C. 27601
N.C.B.E.L.S. License Number: F-0116

DOCUMENT NOT CONSIDERED FINAL UNLESS ALL SIGNATURES COMPLETED

DES BY: M. TORRES	DATE : 11/2025	DWG BY: B. PETERSON	DATE : 11/2025
DES CHK: D. COLE	DATE : 11/2025	CHK BY: D. COLE	DATE : 11/2025

Docusign Envelope ID: 500D4102-4BD1-8175-811B-AF137D171DE3

1 2

BURNT CONNECTOR ON HPU CAPACITOR

3

AURORA PENDANT TAPED CONDUIT

4

AURORA PENDANT CONDUIT SUPPORT

KEY NOTES

1. THE CONTRACTOR SHALL CLEAN AND REMOVE DEBRIS FROM THE INTERIOR OF BOXES/ENCLOSURES/CABINETS.
2. THE CONTRACTOR SHALL REMOVE AND REPLACE CORRODED/BURNT/MISSING CONDUCTORS. THE CONTRACTOR SHALL REPLACE CAPACITOR IN KIND OR WITH APPROVED EQUAL, AS REQUIRED.
3. THE CONTRACTOR SHALL REPLACE BROKEN AND DAMAGED CONDUIT WITH LFMC OR APPROVED EQUAL, AS REQUIRED.
4. THE CONTRACTOR SHALL REMOVE ANY BROKEN/MISSING/UNIFORMLY CORRODED/ZIP-TIED CONDUIT SUPPORTS AND REPLACE WITH CONDUIT CLAMPS. ADDITIONAL CONDUIT CLAMPS SHALL BE INSTALLED TO REDUCE CONDUIT DEFLECTION, AS REQUIRED.

PROJECT NO. 15BPR.164

BEAUFORT COUNTY

TERMINAL: AURORA

STATE OF NORTH CAROLINA
DEPARTMENT OF TRANSPORTATION
RALEIGH

HPU CAPACITOR AND PENDANT REPAIR DETAILS

NORTH CAROLINA PROFESSIONAL SEAL 060158 ENGINEER DRAKE J. COLE
7/16/2026
DRAKE COLE

REVISIONS						SHEET NO.
NO.	BY:	DATE:	NO.	BY:	DATE:	E1-05
1	--	--	3	--	--	TOTAL SHEETS
2	--	--	4	--	--	34

HDR Engineering, Inc. of the Carolinas
555 Fayetteville St., Suite 900 Raleigh, N.C. 27601
N.C.B.E.L.S. License Number: F-0116

DOCUMENT NOT CONSIDERED FINAL UNLESS ALL SIGNATURES COMPLETED

DES BY: M. TORRES	DATE : 11/2025	DWG BY: B. PETERSON	DATE : 11/2025
DES CHK: D. COLE	DATE : 11/2025	CHK BY: D. COLE	DATE : 11/2025

Docusign Envelope ID: 500D4102-4BD1-8175-811B-AF137D171DE3

STRUCTURAL NOTES

ALL STRUCTURAL STEEL SHALL BE AASHTO M 270 GRADE 36 OR GRADE 50.

WELD ELECTRODES SHALL BE E70XX.

ALL NEW STRUCTURAL STEEL FASTENERS SHALL BE HIGH STRENGTH BOLTS FURNISHED AND GALVANIZED (PRIOR TO INSTALLATION AND PAINTING) IN ACCORDANCE WITH SECTION 1072-5 OF THE STANDARD SPECIFICATIONS.

NO SEPARATE PAYMENT WILL BE MADE FOR ANY NECESSARY EXCAVATION AS THIS IS CONSIDERED INCIDENTAL TO THE PILE REPAIRS.

FOR COORDINATION WITH FERRY DIVISION, SEE SPECIAL PROVISIONS.

FOR SUBMITTAL OF WORKING DRAWINGS, SEE SPECIAL PROVISIONS.

FOR FALSEWORK AND FORMWORK, SEE SPECIAL PROVISIONS.

FOR CRANE SAFETY, SEE SPECIAL PROVISIONS.

FOR GROUT OF STRUCTURES, SEE SPECIAL PROVISIONS.

FOR SECURING OF VESSELS, SEE SPECIAL PROVISIONS.

FOR PILE JACKETS, SEE SPECIAL PROVISIONS.

FOR WORK IN, OVER OR ADJACENT TO NAVIGABLE WATERS, SEE SPECIAL PROVISIONS.

FOR DOLPHIN FENDERS, SEE SPECIAL PROVISIONS.

FOR STEEL REPAIRS, SEE SPECIAL PROVISIONS.

FOR STEEL BEAM CRACK REPAIRS, SEE SPECIAL PROVISIONS.

FOR STEEL PILE REPAIRS, SEE SPECIAL PROVISIONS.

FOR STEEL BEARING REPAIRS, SEE SPECIAL PROVISIONS.

FOR CONCRETE WASHOUT, SEE SPECIAL PROVISIONS.

THE CONTRACTOR'S ATTENTION IS CALLED TO THE FACT THAT DUE TO THE NATURE OF PRESERVATION PROJECTS, THE EXTENT OF WORK CANNOT ALWAYS BE ACCURATELY DETERMINED PRIOR TO COMMENCEMENT OF WORK. REPAIR LOCATIONS AND ESTIMATES OF QUANTITIES ARE GIVEN WITH THE BEST INFORMATION AVAILABLE. IF ADDITIONAL REPAIRS NOT SHOWN ON THE DRAWINGS ARE DEEMED NECESSARY BY THE ENGINEER, THE ENGINEER SHALL NOTE ON THE DRAWINGS THE APPROXIMATE LOCATION AND DESCRIPTION OF THE REPAIRS.

EXISTING DIMENSIONS AND BRIDGE CONDITION ARE FROM THE BEST INFORMATION AVAILABLE. THE CONTRACTOR SHALL FIELD VERIFY THE INFORMATION SHOWN ON THE PLANS AND NOTIFY THE ENGINEER IF ACTUAL DIMENSIONS OR CONDITIONS DIFFER.

THE CONTRACTOR SHALL HAVE NO CLAIM WHATSOEVER AGAINST THE DEPARTMENT FOR ANY DELAYS OR ADDITIONAL COST INCURRED BASED ON DIFFERENCES BETWEEN WHAT IS SHOWN ON THE PLANS AND THE ACTUAL CONDITIONS AT THE PROJECT SITE.

IT IS THE CONTRACTOR'S RESPONSIBILITY TO FOLLOW ALL STATE AND FEDERAL SAFETY REQUIREMENTS.

WORK ON THE BRIDGE SHALL BE PERFORMED SO AS NOT TO ALLOW DEBRIS TO FALL BELOW, EXCEPT WHERE THE CONTRACTOR'S PLANS USE PLATFORMS, NETS, SCREENS OR OTHER PROTECTIVE DEVICES TO CATCH THE MATERIAL. THE CONTRACTOR SHALL SUBMIT PLANS FOR CONSTRUCTION IN ACCORDANCE WITH ARTICLE 402-2 OF THE STANDARD SPECIFICATIONS AND THE PROJECT SPECIAL PROVISIONS.

THE CONTRACTOR SHALL PERFORM ALL WORK WITH CARE SO THAT THE EXISTING STRUCTURE WHICH IS TO REMAIN IN PLACE WILL NOT BE DAMAGED. IF THE CONTRACTOR DAMAGES ANY PART OF THE EXISTING STRUCTURE WHICH IS TO REMAIN IN PLACE, THE DAMAGED AREA SHALL BE REPAIRED OR REPLACED IN A MANNER SATISFACTORY TO THE ENGINEER AT NO ADDITIONAL COST TO THE DEPARTMENT.

ANY DAMAGE TO THE EXISTING REINFORCING STEEL, DURING CONTRACTOR'S OPERATIONS, SHALL BE REPAIRED AS DIRECTED BY THE ENGINEER AND PERFORMED AT NO ADDITIONAL COST TO THE DEPARTMENT.

PRIOR TO BEGINNING WORK, THE CONTRACTOR SHALL SUBMIT FOR REVIEW AND APPROVAL A COMPLETE SEQUENCE OF TASKS FOR EACH OPERATION AFFECTING THE BRIDGE SURFACE AND/OR TRAFFIC.

GENERAL NOTES

DETAILS OF MACHINERY SHALL CONFORM TO THE LATEST AASHTO MOVABLE BRIDGE DESIGN SPECIFICATIONS UNLESS OTHERWISE SHOWN ON THE PLANS OR PROVIDED FOR IN THE SPECIFICATIONS.

THE CONTRACTOR SHALL FIELD VERIFY ALL DIMENSIONS ON THE PLANS AND SHALL NOTIFY THE ENGINEER IN WRITING OF ANY DISCREPANCIES PRIOR TO ORDERING ANY MATERIALS OR BEGINNING ANY REPAIR WORK. DIMENSIONS SHALL BE COORDINATED WITH ALL DRAWINGS AS REQUIRED.

WORK SHALL BE IN COMPLIANCE WITH THE OCCUPATIONAL SAFETY AND HEALTH ADMINISTRATION (OSHA) REGULATIONS, DEPARTMENT OF ENVIRONMENTAL QUALITY (DEQ) REGULATIONS, THE MOST CURRENT VERSION OF NCDOT STANDARD SPECIFICATIONS FOR ROADS AND STRUCTURES, FEDERAL AND STATE REGULATIONS AS APPLICABLE AND THE U.S. COAST GUARD.

DAMAGE TO THE EXISTING RAMP STRUCTURES, INCLUDING PAINT OR GALVANIZED COATINGS, CAUSED BY THE ACTIONS OF THE CONTRACTOR OR THEIR SUB-CONSULTANTS SHALL BE REPAIRED AT NO ADDITIONAL COST TO THE DEPARTMENT.

THE CONTRACTOR IS NOT ALLOWED TO STORE ANY MATERIALS OR EQUIPMENT ON THE RAMP, GANTRY STRUCTURE OR APPROACHES.

FOR RAMP MECHANICAL REPAIR WORK, SEE SPECIAL PROVISIONS.

FOR RAMP ELECTRICAL REPAIR WORK, SEE SPECIAL PROVISIONS.

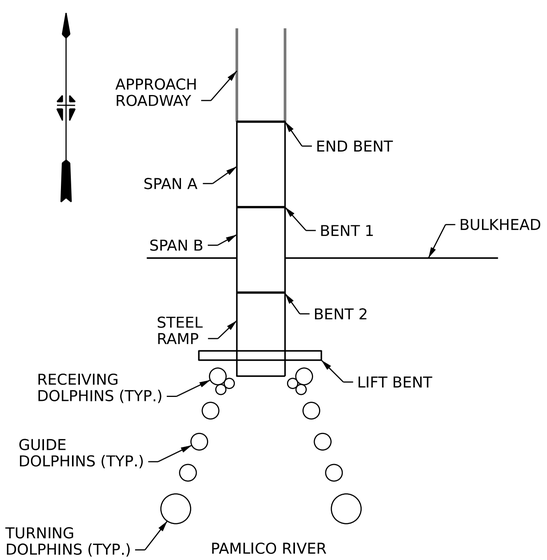

KEY PLAN

TOTAL BILL OF MATERIAL

	STEEL BEARING REPAIRS	STEEL BEAM CRACK REPAIR	STEEL PILE REPAIRS	PILE JACKETS	STEEL REPAIRS	UNTREATED WHITE OAK TIMBER	ULTRA-HIGH MOLECULAR WEIGHT POLYETHYLENE	RAMP MECHANICAL REPAIR WORK	RAMP ELECTRICAL REPAIR WORK
	LUMP SUM	EACH	LBS.	LIN. FT.	LUMP SUM	LIN. FT.	SQ. FT.	LUMP SUM	LUMP SUM
SUPERSTRUCTURE		6							
BENT 1									
BENT 2				47.4					
LIFT BENT			246	151					
DOLPHINS						649	295		
TOTAL	LUMP SUM	6	246	198.4	LUMP SUM	649	295	LUMP SUM	LUMP SUM

PROJECT NO. 15BPR.164
BEAUFORT COUNTY
TERMINAL: BAYVIEW

STATE OF NORTH CAROLINA
DEPARTMENT OF TRANSPORTATION
RALEIGH

BILL OF MATERIAL, GENERAL NOTES, AND KEY PLAN

NORTH CAROLINA PROFESSIONAL SEAL 049352 ENGINEER GREGORY E. MYERS
7/16/2026
Gregory E. Myers

REVISIONS						
NO.	BY:	DATE:	NO.	BY:	DATE:	
1	--	--	3	--	--	
2	--	--	4	--	--	

SHEET NO. G2-01
TOTAL SHEETS 34

DES BY: B. BINOWSKI DATE: 11/2025
DES CHK: D. KNICKERBOCKER DATE: 11/2025
DWG BY: B. PETERSON DATE: 11/2025
CHK BY: D. KNICKERBOCKER DATE: 11/2025

HDR Engineering, Inc. of the Carolinas
555 Fayetteville St., Suite 900 Raleigh, N.C. 27601
N.C.B.E.L.S. License Number: F-0116

DOCUMENT NOT CONSIDERED FINAL UNLESS ALL SIGNATURES COMPLETED

Docusign Envelope ID: 500D4102-4BD1-8175-811B-AF137D171DE3

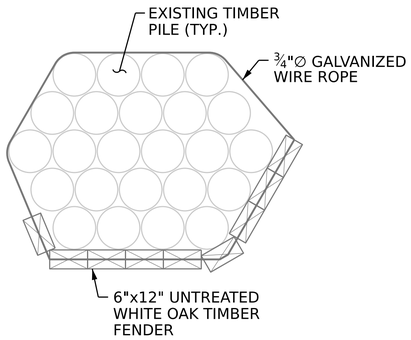

PLAN

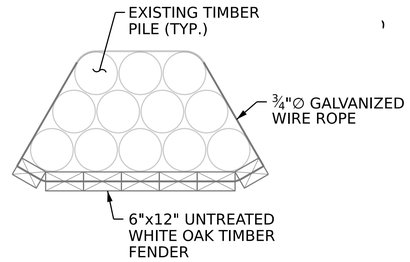

PLAN

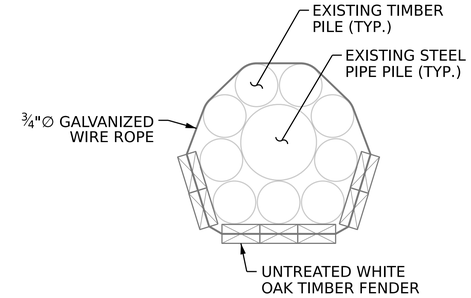

PLAN

NOTES

FOR DOLPHIN FENDERS, SEE SPECIAL PROVISIONS.

ATTACH THE 6" x 12" WHITE OAK FENDERS TO EXISTING DOLPHINS WITH 3/4" ∅ WIRE ROPE THROUGH THE OAK, OVER AND AROUND DOLPHINS AS SHOWN. SECURE THE 3/4" ∅ WIRE ROPE WITH 3/8" SQUARE STAPLES AND TWO CABLE CLAMPS AT EACH END.

GALVANIZED WIRE ROPE USED FOR INSTALLING UNTREATED WHITE OAK TIMBER FENDERS SHALL CONFORM TO ASTM A603 CLASS B. STAINLESS STEEL WIRE ROPE SHALL CONFORM TO ASTM A580 TYPE 316.

ALL HARDWARE SHALL BE GALVANIZED UNLESS OTHERWISE NOTED.

THE 6" x 12" UNTREATED WHITE OAK TIMBER FENDERS SHALL BE FACED AS SHOWN WITH 2" THICK x 12" WIDE x 5'-0" LONG ULTRA HIGH MOLECULAR POLYETHYLENE.

NO SEPARATE MEASUREMENT OR PAYMENT WILL BE MADE FOR WIRE ROPE USED TO INSTALL UNTREATED WHITE OAK TIMBER FENDER, HARDWARE, TOOLS, EQUIPMENT, OR LABOR. THIS WORK AND MATERIALS SHALL BE INCLUDED IN THE CONTRACT UNIT BID PRICE FOR UNTREATED STRUCTURAL TIMBER.

BOLTS FOR THE ATTACHMENT OF UHMW-PE FACING TO UNTREATED TIMBER WHITE OAK FENDERING SHALL BE IN ACCORDANCE WITH ASTM F593 GROUP 2 (TYPE 316 STAINLESS STEEL).

THE DOLPHIN CLASSIFICATIONS SHOWN ARE GENERAL. TURNING DOLPHINS GENERALLY REFER TO DOLPHINS AT THE SLIP ENTRANCE. RECEIVING DOLPHINS REFER TO DOLPHINS IMMEDIATELY IN FRONT OF THE RAMP. GUIDE DOLPHINS GENERALLY REFER TO DOLPHINS LINING THE SLIP. INDIVIDUAL DOLPHINS MAY VARY. CONTRACTOR SHALL FIELD VERIFY EXISTING PILE AND FENDER COUNTS FOR INDIVIDUAL DOLPHINS AND NOTIFY THE ENGINEER OF ANY DISCREPANCIES IN WRITING PROIR TO ORDERING MATERIALS OF PERFORMING REPAIRS.

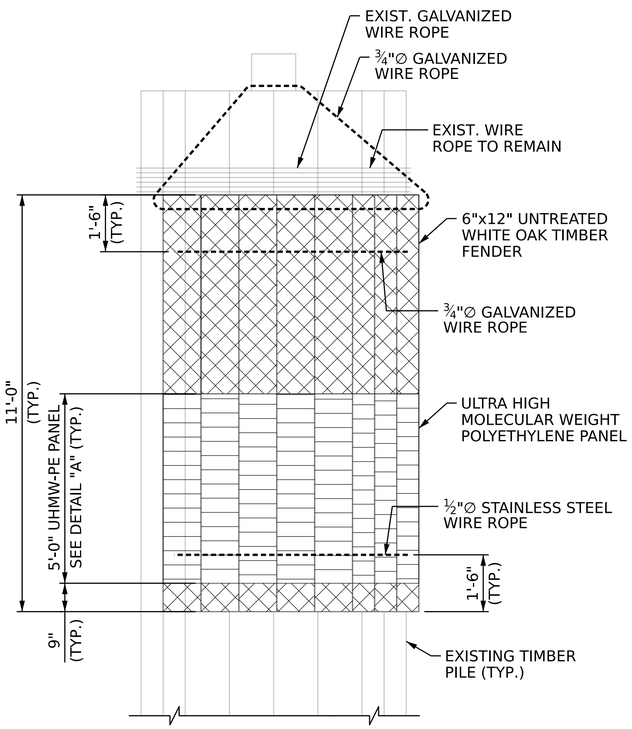

ELEVATION
TURNING DOLPHIN

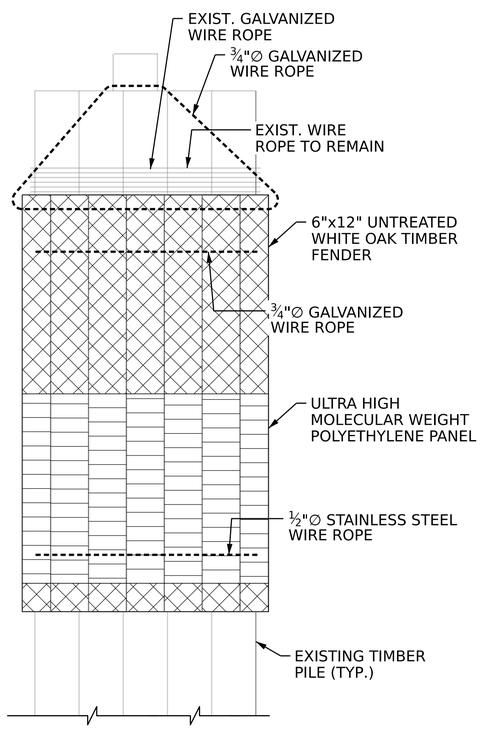

ELEVATION
RECEIVING DOLPHIN

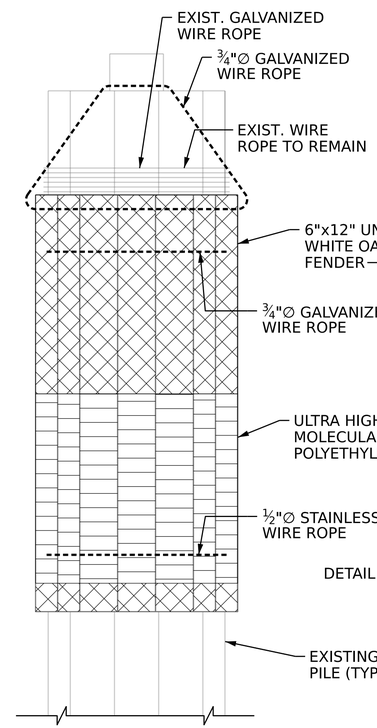

ELEVATION
GUIDE DOLPHIN

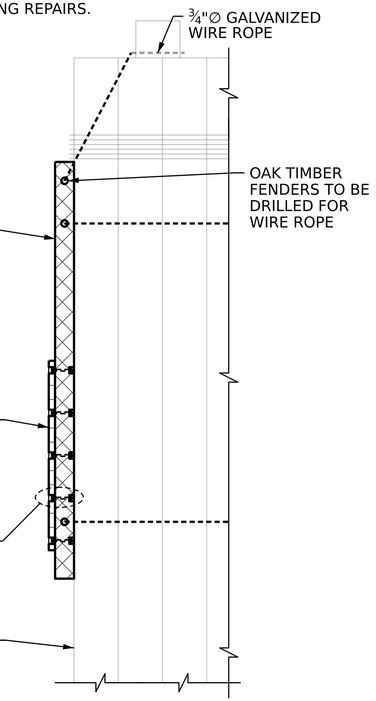

TYP. END ELEVATION

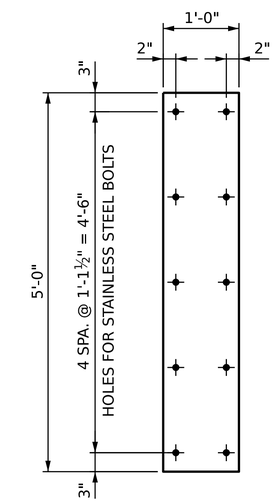

DETAIL "A"

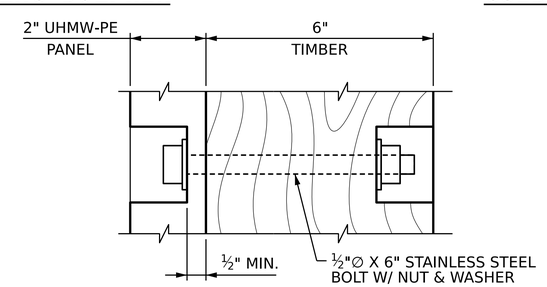

DETAIL "B"

ESTIMATED QUANTITIES	
ULTRA HIGH MOLECULAR WEIGHT POLYETHYLENE	UNTREATED WHITE OAK TIMBER
SQ. FT.	LIN. FT.
295	649

PROJECT NO. 15BPR.164
BEAUFORT COUNTY
TERMINAL: BAYVIEW

STATE OF NORTH CAROLINA
DEPARTMENT OF TRANSPORTATION
RALEIGH

DOLPHIN FENDER PANEL REPLACEMENT DETAILS

NORTH CAROLINA PROFESSIONAL SEAL 025266 ENGINEER SCOTT A. McCOY
7/16/2026

REVISIONS							SHEET NO.
NO.	BY:	DATE:	NO.	BY:	DATE:		S2-01
1	--	--	3	--	--		TOTAL SHEETS
2	--	--	4	--	--		34

DES BY: G. MYERS	DATE : 11/2025	DWG BY: B. PETERSON	DATE : 11/2025
DES CHK: L. CRESSMAN	DATE : 11/2025	CHK BY: L. CRESSMAN	DATE : 11/2025

HDR Engineering, Inc. of the Carolinas
555 Fayetteville St., Suite 900 Raleigh, N.C. 27601
N.C.B.E.L.S. License Number: F-0116

DOCUMENT NOT CONSIDERED FINAL UNLESS ALL SIGNATURES COMPLETED

Docusign Envelope ID: 500D4102-4BD1-8175-811B-AF137D171DE3

GIRDER 1 BEARING AT BENT 2

GIRDER 2 BEARING AT BENT 2

GIRDER 1 BEARING AT BENT 2

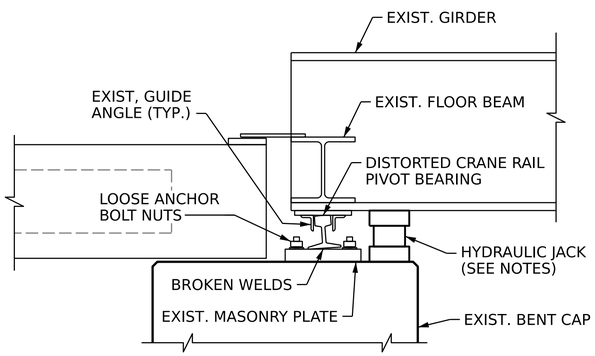

EXISTING CONDITION

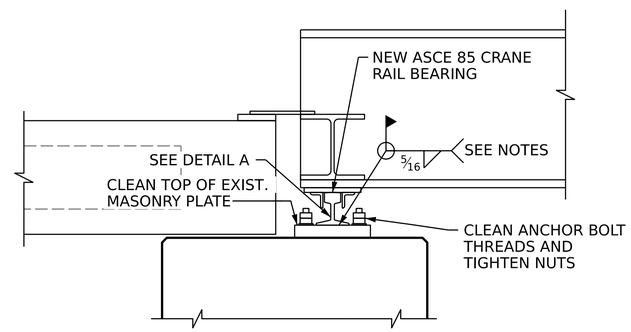

REPAIR CONDITION

GIRDER 1 BEARING REPAIR DETAILS

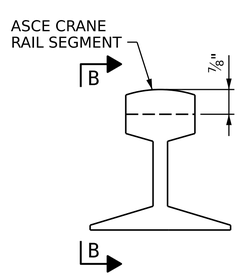

DETAIL A

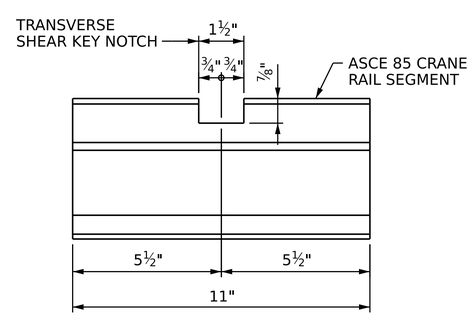

VIEW B

TILT BEARING MEMBER FABRICATION

NOTES

WORK DEFINED IN THIS DRAWING SHALL BE PERFORMED IN ACCORDANCE WITH - AND PAID FOR UNDER - 'STEEL BEARING REPAIRS' AS REFERENCED IN THE PROJECT SPECIAL PROVISIONS.

IMAGES ARE TAKEN FROM INSPECTION REPORT DATED 11/01/2023, PRIOR TO BEGINNING ANY REPAIR WORK, FIELD VERIFY EXISTING CONDITIONS. IF EXISTING CONDITIONS VARY SIGNIFICANTLY FROM IMAGES SHOWN, NOTIFY THE ENGINEER IN WRITING PRIOR TO ORDERING MATERIALS OR BEGINNING REPAIR WORK.

CLEAN ANCHOR BOLT THREADS AND TIGHTEN NUTS AS REQUIRED AT GIRDER 1 AND 2 BEARING LOCATIONS. INCLUDE DOUBLE (JAM) NUT ON EXISTING ANCHOR BOLTS AT BOTH GIRDER 1 AND GIRDER 2.

SURFACE PREPARATION FOR WELDING AND/OR PAINTING: REMOVE RUST, PAINT, AND OTHER CONTAMINANTS DOWN TO BARE STEEL TO SSPC-SP3 STANDARDS. VACUUM-ASSISTED HAND POWER TOOLS SHALL BE USED FOR CAPTURE AND CONTAINMENT OF CONTAMINANTS. SAND BLASTING SHALL NOT BE PERMITTED OVER WATER.

REPAIR PROCEDURE:

1. MARK CONTROL LINES SUFFICIENT TO INDICATE PROPER ALIGNMENT FOR NEW RAIL AFTER EXISTING RAIL IS REMOVED.
2. ENGAGE JACKING SYSTEM TO REMOVE LOAD FROM 'TILT' BEARING (RAIL SECTION AND BASE PLATE) AND LIFT REAR END OF SPAN TO ALLOW TRANSVERSE SHEAR KEY TO CLEAR THE TOP OF THE EXISTING BEARING RAIL SECTION. RESTRAIN THE RAMP IN 3 (VERTICAL, LONGITUDINAL, AND TRANSVERSE) DIRECTIONS.
3. TAKING CARE TO PROTECT THE ANCHOR RODS AND MASONRY PLATE FROM GOUGING, CUT RAIL SECTION AWAY FROM BASE PLATE AND REMOVE IT THEN GRIND MASONRY PLATE SURFACE SMOOTH AND PREPARE SURFACE FOR WELDING.
4. FURNISH REPLACEMENT ASCE 85 CRANE RAIL SECTION FABRICATED AS SHOWN. FILLET WELD NEW RAIL SECTION TO EXISTING BASE PLATE.
5. PREPARE WELD AND STEEL SURFACES FOR FINISHING.
6. PAINT THE EXPOSED STEEL AND CONNECTION COMPONENTS IN THE REPAIR AREA IN ACCORDANCE WITH SECTION 442-12 OF THE STANDARD SPECIFICATIONS, USING PAINT SYSTEM 4 FROM NCDOT'S STRUCTURAL STEEL SHOP COATINGS PROGRAM DOCUMENT, WITH TOPCOAT COLOR MATCHED TO THE EXISTING TOPCOAT COLOR.
7. LOWER SPAN ONTO THE NEW BEARING ELEMENT USING THE JACKING SYSTEM AND REMOVE THE TEMPORARY SPAN RESTRAINTS

PROJECT NO. 15BPR.164
BEAUFORT COUNTY
TERMINAL: BAYVIEW

STATE OF NORTH CAROLINA
DEPARTMENT OF TRANSPORTATION
RALEIGH

STEEL BEARING REPAIR DETAILS

NORTH CAROLINA PROFESSIONAL SEAL 045005 ENGINEER DAVID KNICKERBOCKER
7/16/2026
DAVID KNICKERBOCKER

REVISIONS							SHEET NO.
NO.	BY:	DATE:	NO.	BY:	DATE:		S2-02
1	--	--	3	--	--		TOTAL SHEETS
2	--	--	4	--	--		34

HDR Engineering, Inc. of the Carolinas
555 Fayetteville St., Suite 900 Raleigh, N.C. 27601
N.C.B.E.L.S. License Number: F-0116

DOCUMENT NOT CONSIDERED FINAL UNLESS ALL SIGNATURES COMPLETED

DES BY:	B. BINOWSKI	DATE :	11/2025
DES CHK:	D. KNICKERBOCKER	DATE :	11/2025
DWG BY:	B. PETERSON	DATE :	11/2025
CHK BY:	D. KNICKERBOCKER	DATE :	11/2025

Docusign Envelope ID: 500D4102-4BD1-8175-811B-AF137D171DE3

NORTH FACE OF FLOORBEAM 9 AT GIRDER 2

(OTHER STEEL BEAM CRACK REPAIR AREAS SIMILAR)

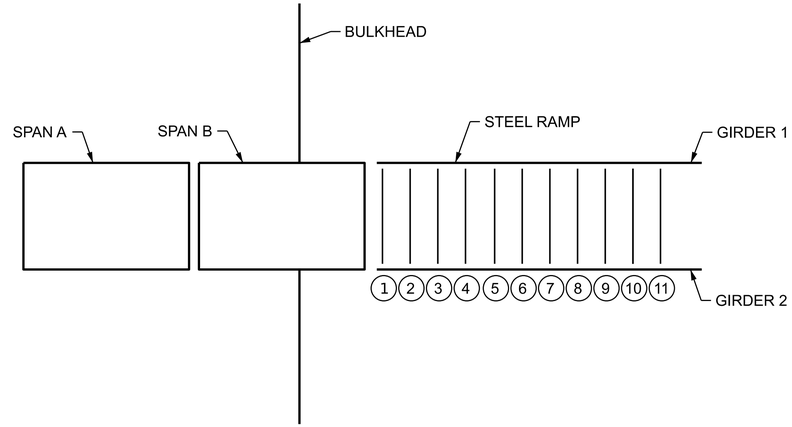

PLAN LAYOUT

(#) FLOOR BEAM NUMBER (TYP.)

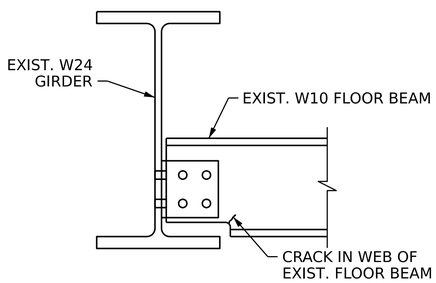

EXISTING CONDITION

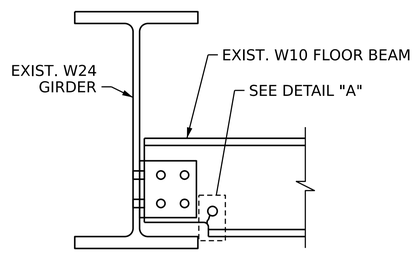

HOLE PREPARATION CONDITION

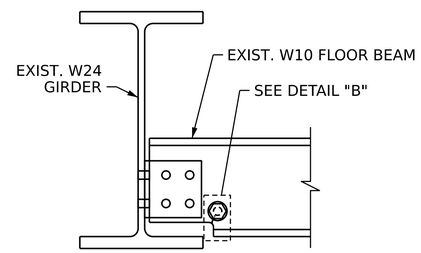

FINAL CONDITION

FLOOR BEAM WEB CRACK REPAIR DETAILS

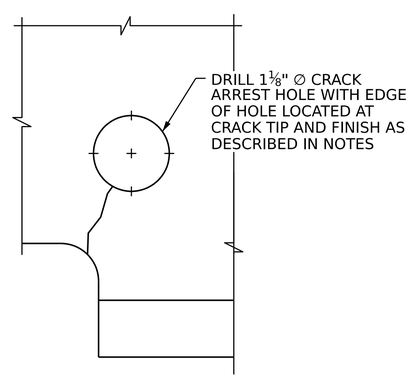

DETAIL "A"

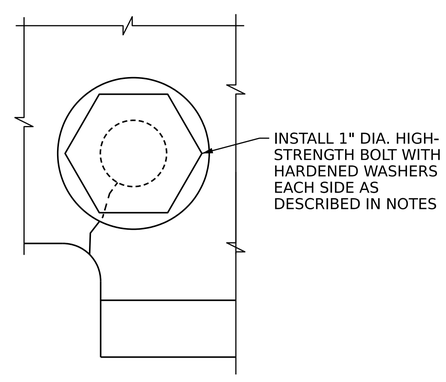

DETAIL "B"

NOTES

WORK DEFINED IN THIS DRAWING SHALL BE PERFORMED IN ACCORDANCE WITH - AND PAID FOR UNDER - 'STEEL BEAM CRACK REPAIRS' AS REFERENCED IN THE PROJECT SPECIAL PROVISIONS.

IMAGES ARE TAKEN FROM SPECIAL INSPECTION REPORT DATED 11/02/2023. PRIOR TO BEGINNING ANY REPAIR WORK, FIELD VERIFY EXISTING CONDITIONS. IF EXISTING CONDITIONS VARY SIGNIFICANTLY FROM IMAGES SHOWN, NOTIFY THE ENGINEER IN WRITING PRIOR TO ORDERING MATERIALS OR BEGINNING REPAIR WORK.

IMAGES SHOW TWO EXAMPLES OF CRACKS NEEDING REPAIR. SEE "STEEL BEAM CRACK REPAIR LOCATION TABLE" FOR ALL CRACK REPAIR LOCATIONS.

SURFACE PREPARATION FOR WELDING AND/OR PAINTING: REMOVE RUST, PAINT, AND OTHER CONTAMINANTS DOWN TO BARE STEEL TO SSPC-SP3 STANDARDS. VACUUM-ASSISTED HAND POWER TOOLS SHALL BE USED FOR CAPTURE AND CONTAINMENT OF CONTAMINANTS. SAND BLASTING SHALL NOT BE PERMITTED OVER WATER.

CRACK REPAIR PROCEDURE NOTES:

1. LOCATE THE CRACK TIP USING MAGNETIC PARTICLE TESTING (MT) OR DYE-PENETRANT TESTING (PT). INSPECT BOTH SIDES OF THE PLATE TO ENSURE THE TIP IS NOT MISSED.
2. POSITION MAGNETIC BASED DRILL AS SHOWN RELATIVE TO THE AS-LOCATED CRACK TIP.
3. DRILL HOLE WITH ANNULAR CUTTER.
4. CHECK DRILLED PLATE AND REMOVED CORE FOR EVIDENCE OF CRACK TIP.
5. FOLLOWING REMOVAL OF THE CORE, REINSPECT THE EDGE OF THE DRILLED HOLE USING MT OR PT TO ENSURE THE CRACK TIP DOES NOT REMAIN.
6. SAND THE EDGES OF THE DRILLED HOLE USING AN 80 TO 100 GRIT FLAP WHEEL WITH AN ANGLE GRINDER ON THE EXTERIOR EDGES AND AN 80 TO 100 GRIT FLAP WHEEL WITH DIE GRINDER ON THE INTERIOR EDGES.
7. CLEAN AND PREPARE THE REPAIR AREA FOR FINISHING.
8. INSTALL 1-INCH DIA. BOLT WITH WASHER ON EACH WEB FACE.
9. PAINT THE EXPOSED STEEL AND CONNECTION COMPONENTS IN THE REPAIR AREA IN ACCORDANCE WITH SECTION 442-12 OF THE STANDARD SPECIFICATIONS, USING PAINT SYSTEM 4 FROM NCDOT'S STRUCTURAL STEEL SHOP COATINGS PROGRAM DOCUMENT, WITH TOPCOAT COLOR MATCHED TO THE EXISTING TOPCOAT COLOR.

STEEL BEAM CRACK REPAIR LOCATION TABLE

NO.	GIRDER NO.	FLOORBEAM NO.
1	GIRDER 1	FLOORBEAM 1
2	GIRDER 1	FLOORBEAM 4
3	GIRDER 2	FLOORBEAM 1
4	GIRDER 2	FLOORBEAM 2
5	GIRDER 2	FLOORBEAM 3
6	GIRDER 2	FLOORBEAM 10

PROJECT NO. 15BPR.164

BEAUFORT COUNTY

TERMINAL: BAYVIEW

STATE OF NORTH CAROLINA
DEPARTMENT OF TRANSPORTATION
RALEIGH

STEEL BEAM CRACK REPAIR DETAILS

NORTH CAROLINA PROFESSIONAL SEAL 045005 ENGINEER DAVID KNICKERBOCKER
7/16/2026
DAVID KNICKERBOCKER

DES BY:	B. BINOWSKI	DATE :	11/2025	DWG BY:	B. PETERSON	DATE :	11/2025
DES CHK:	D. KNICKERBOCKER	DATE :	11/2025	CHK BY:	D. KNICKERBOCKER	DATE :	11/2025

HDR Engineering, Inc. of the Carolinas
555 Fayetteville St., Suite 900 Raleigh, N.C. 27601
N.C.B.E.L.S. License Number: F-0116

DOCUMENT NOT CONSIDERED FINAL UNLESS ALL SIGNATURES COMPLETED

REVISIONS								SHEET NO.
NO.	BY:	DATE:	NO.	BY:	DATE:			S2-03
1	--	--	3	--	--			TOTAL SHEETS
2	--	--	4	--	--			34

Docusign Envelope ID: 500D4102-4BD1-8175-811B-AF137D171DE3

NORTH FACE OF PILE 4

NORTH SIDE OF PILE 1

RIGHT FACE OF P2 TO P5 BRACING

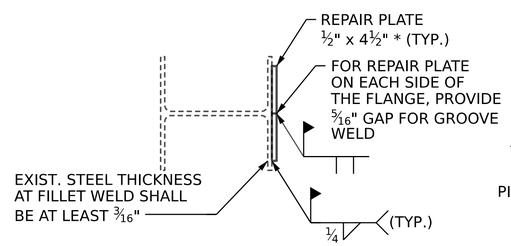

SECTION A-A

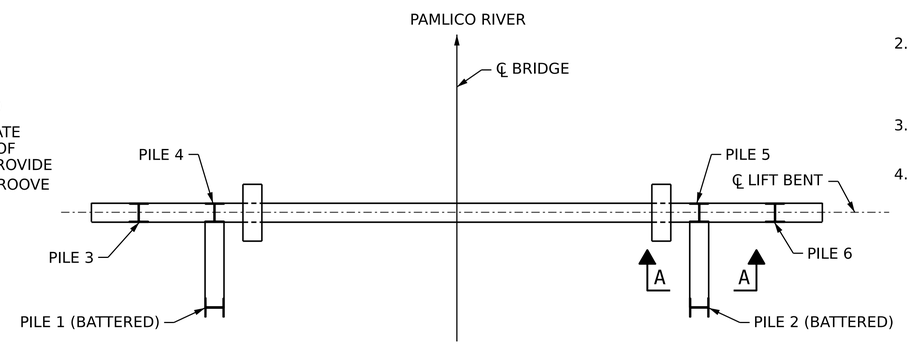

PLAN OF LIFT BENT

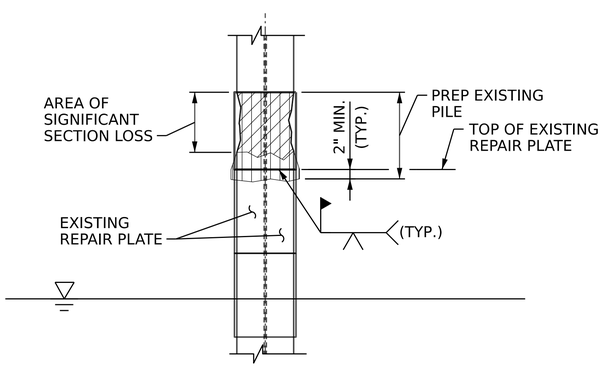

ELEVATION - VIEW

HP12x53 STEEL PILE REPAIR DETAILS

ESTIMATED STEEL PILE REPAIR QUANTITIES				
BENT NO.	PILE NO.	REPAIR TYPE	DETERIORATION LOCATION	QUANTITY (LBS.)
LIFT BENT	2	WELDED PLATE REPAIR	BETWEEN BRACING & WATER LINE	87
	4	WELDED PLATE REPAIR	BETWEEN BRACING & WATERLINE	87
	P2-P5	WELDED PLATE REPAIR	HORIZONTAL BRACING MEMBER REPAIR	72

NOTES

WORK DEFINED IN THIS DRAWING SHALL BE PERFORMED IN ACCORDANCE WITH - AND PAID FOR UNDER - 'STEEL PILE REPAIRS' AS REFERENCED IN THE PROJECT SPECIAL PROVISIONS.

IMAGES ARE TAKEN FROM SPECIAL INSPECTION REPORT DATED 11/02/2023. PRIOR TO BEGINNING ANY REPAIR WORK, FIELD VERIFY EXISTING CONDITIONS. IF EXISTING CONDITIONS VARY SIGNIFICANTLY FROM IMAGES SHOWN, NOTIFY THE ENGINEER IN WRITING PRIOR TO ORDERING MATERIALS OR BEGINNING REPAIR WORK..

* LOSSES IN EXCESS OF 33% TO THE PILE FLANGES OR WEBS SHALL BE DEFINED AS "SIGNIFICANT", PROMPTING REQUIREMENT OF WELDED STEEL PILE REPAIR MATERIAL AS SHOWN. MATERIAL SHALL BE INSTALLED AT DIMENSIONS SHOWN, SUBJECT TO ASSOCIATED LIMITS. RESULTING TOTAL CROSS-SECTIONAL AREA OF ANY REPAIRED FLANGE OR WEB SHALL EQUAL OR EXCEED THE AS-FABRICATED PLATE AREA PER ORIGINAL PILE DESIGNATION DIMENSIONS.

SURFACE PREPARATION FOR WELDING AND/OR PAINTING: REMOVE RUST, PAINT, AND OTHER CONTAMINANTS DOWN TO BARE STEEL TO SSPC-SP3 STANDARDS. VACUUM-ASSISTED HAND POWER TOOLS SHALL BE USED FOR CAPTURE AND CONTAINMENT OF CONTAMINANTS. SAND BLASTING SHALL NOT BE PERMITTED OVER WATER.

SEE SHEET S2-06 AND S2-07 FOR DETAILS OF THE FRP ENCASEMENT REPAIR DETAILS ON LIFT BENT.

WELDED PLATE REPAIR PROCEDURE NOTES:

1. REMOVE LOOSE RUST AND MARINE GROWTH FROM THE EXISTING STEEL PILE TO OBTAIN A CLEAN, SOUND SURFACE PRIOR TO PERFORMING STEEL REPAIRS AND PILE JACKETING, USING APPROVED MECHANICAL MEANS OR HIGH-PRESSURE WATER BLASTING. IF ADDITIONAL SECTION LOSS GREATER THAN 33% IS FOUND TO THE PILE FLANGES OR WEB, NOTIFY THE ENGINEER.
2. TACK WELD NEW REPAIR PLATE INTO THE PROPER LOCATION. ENSURE REPAIR PLATE EXTENDS A MINIMUM OF 4" INCHES ONTO THE PILE FLANGE WITH ACCEPTABLE SECTION BEYOND THE DETERIORATED SECTION OF THE PILE FLANGE.
3. WELD NEW REPAIR PLATES IF A NEW PLATE IS IN CONTACT WITH AN EXISTING REPAIR PLATE, BUTT WELD THE INTERFACE BETWEEN THE TWO PLATES.
4. FOR ANY REPAIRS NOT ENCAPSULATED BY THE PILE JACKET, PAINT THE EXPOSED STEEL AND CONNECTED COMPONENTES IN THE REPAIR AREA IN ACCORDANCE WITH SECTION 442-12 OF THE STANDARD SPECIFICATIONS, USING PAINT SYSTEM 4 FROM NCDOT'S STRUCTURAL STEEL SHOP COATINGS PROGRAM DOCUMENT, WITH TOPCOAT COLOR MATCHED TO THE EXISTING TOPCOAT COLOR.

PROJECT NO. 15BPR.164
BEAUFORT COUNTY
TERMINAL: BAYVIEW

STATE OF NORTH CAROLINA
DEPARTMENT OF TRANSPORTATION
RALEIGH

STEEL PILE REPAIR DETAILS

NORTH CAROLINA PROFESSIONAL SEAL 045005 ENGINEER DAVID KNICKERBOCKER
7/16/2026
DAVID KNICKERBOCKER

HDR Engineering, Inc. of the Carolinas
555 Fayetteville St., Suite 900 Raleigh, N.C. 27601
N.C.B.E.L.S. License Number: F-0116

DOCUMENT NOT CONSIDERED FINAL UNLESS ALL SIGNATURES COMPLETED

REVISIONS						
NO.	BY:	DATE:	NO.	BY:	DATE:	
1	--	--	3	--	--	
2	--	--	4	--	--	

SHEET NO. S2-04
TOTAL SHEETS 34

DES BY: B. BINOWSKI	DATE : 11/2025	DWG BY: B. PETERSON	DATE : 11/2025
DES CHK: D. KNICKERBOCKER	DATE : 11/2025	CHK BY: D. KNICKERBOCKER	DATE : 11/2025

Docusign Envelope ID: 500D4102-4BD1-8175-811B-AF137D171DE3

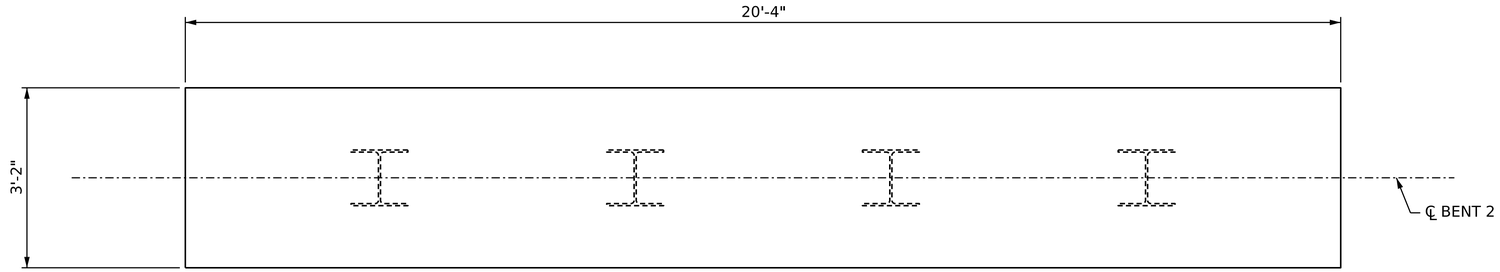

PLAN OF CAP

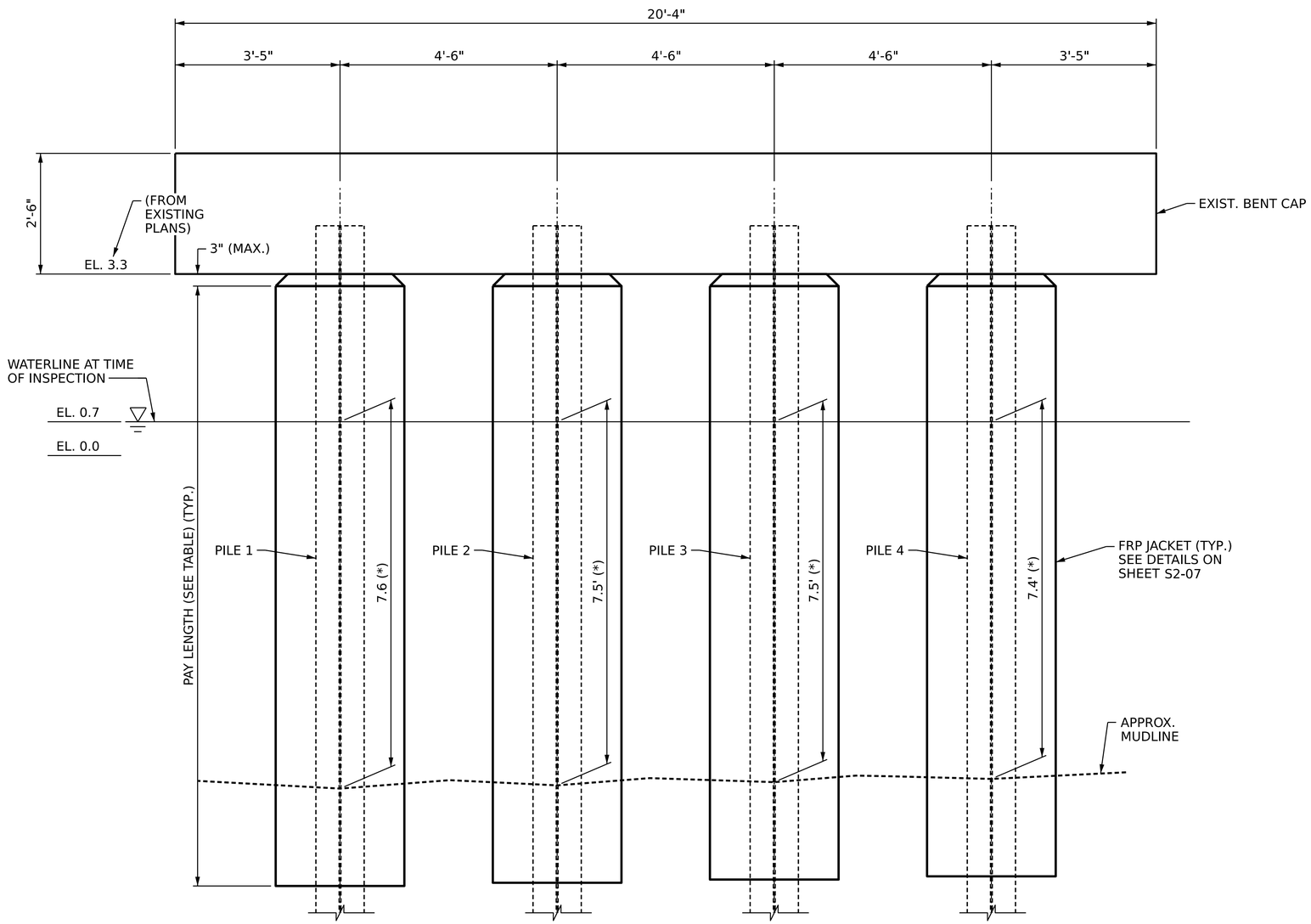

ELEVATION

BAR TYPE

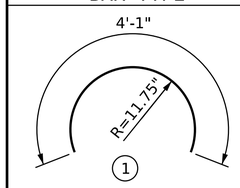

ALL BAR DIMENSIONS ARE OUT-TO-OUT

BILL OF MATERIAL

BAR	NO.	SIZE	TYPE	LENGTH	WEIGHT
* D1	28	#6	STR	2'-0"	84
* V1	8	#6	STR	9'-3"	111
* V2	8	#6	STR	9'-2"	110
* V3	8	#6	STR	9'-2"	110
* V4	8	#6	STR	9'-0"	108
* S1	80	#4	1	4'-1"	218
* EPOXY COATED BARS					
EPOXY COATED REINFORCING STEEL (LBS.)					741
CLASS A CONCRETE (CU. YDS.)					6.0
CONCRETE PILE JACKETS (LIN. FT.)					47.4

PILE JACKET QUANTITY TABLE

DESCRIPTION	PILE NUMBER			
	1	2	3	4
APPROX. PAY LENGTH (FT)	11.95	11.85	11.85	11.75
"V" BAR MARK	V1	V2	V3	V4
NO. OF #6D1 DOWELS	7	7	7	7
NO. OF #4S1 STIRRUP PAIRS	10	10	10	10
CONCRETE FILL (CU. YDS.)	1.5	1.5	1.5	1.5

NOTES

* SOUNDINGS TAKEN FROM UNDERWATER INSPECTION BY CONSOR DATED NOVEMBER 2ND, 2023, AND ARE SHOWN FOR INFORMATION ONLY. CONTRACTOR SHALL FIELD VERIFY MUDLINE ELEVATIONS AND NOTIFY ENGINEER IN WRITING OF ANY DISCREPANCIES PRIOR TO ORDERING MATERIALS OR PERFORMING ANY REPAIR WORK.

BENT DIMENSIONS AND ELEVATIONS ARE APPROXIMATE AND ARE TAKEN FROM EXISTING PLANS.

EXISTING PILES ARE HP12x53 STEEL PILES.

PILE JACKETS SHALL BE EMBEDDED A MINIMUM OF 2'-0" BELOW THE MUDLINE. SEE DETAILS ON SHEET S2-07.

FOR "PILE JACKETS" SEE SPECIAL PROVISIONS.

PILE JACKET LENGTH SHALL NOT BE LESS THAN 4'-0" REGARDLESS OF MUDLINE ELEVATION.

PROJECT NO. 15BPR.164
BEAUFORT COUNTY
TERMINAL: BAYVIEW

STATE OF NORTH CAROLINA
DEPARTMENT OF TRANSPORTATION
RALEIGH

BENT 2 PILE JACKET REPAIR DETAILS

NORTH CAROLINA PROFESSIONAL SEAL 045005 ENGINEER DAVID KNICKERBOCKER
7/16/2026
DAVID KNICKERBOCKER

REVISIONS								SHEET NO.
NO.	BY:	DATE:	NO.	BY:	DATE:			S2-05
1	--	--	3	--	--			TOTAL SHEETS
2	--	--	4	--	--			34

HDR Engineering, Inc. of the Carolinas
555 Fayetteville St., Suite 900 Raleigh, N.C. 27601
N.C.B.E.L.S. License Number: F-0116

DOCUMENT NOT CONSIDERED FINAL UNLESS ALL SIGNATURES COMPLETED

DES BY:	B. BINOWSKI	DATE :	11/2025
DES CHK:	D. KNICKERBOCKER	DATE :	11/2025
DWG BY:	B. PETERSON	DATE :	11/2025
CHK BY:	D. KNICKERBOCKER	DATE :	11/2025

Docusign Envelope ID: 500D4102-4BD1-8175-811B-AF137D171DE3

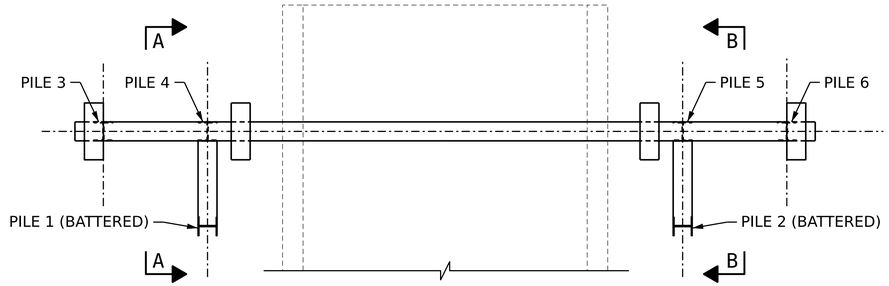

PLAN

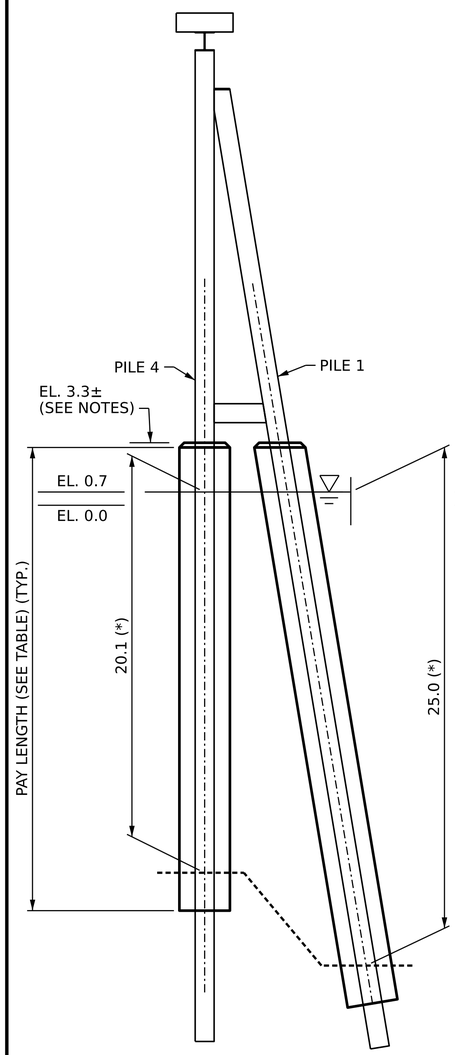

VIEW A-A

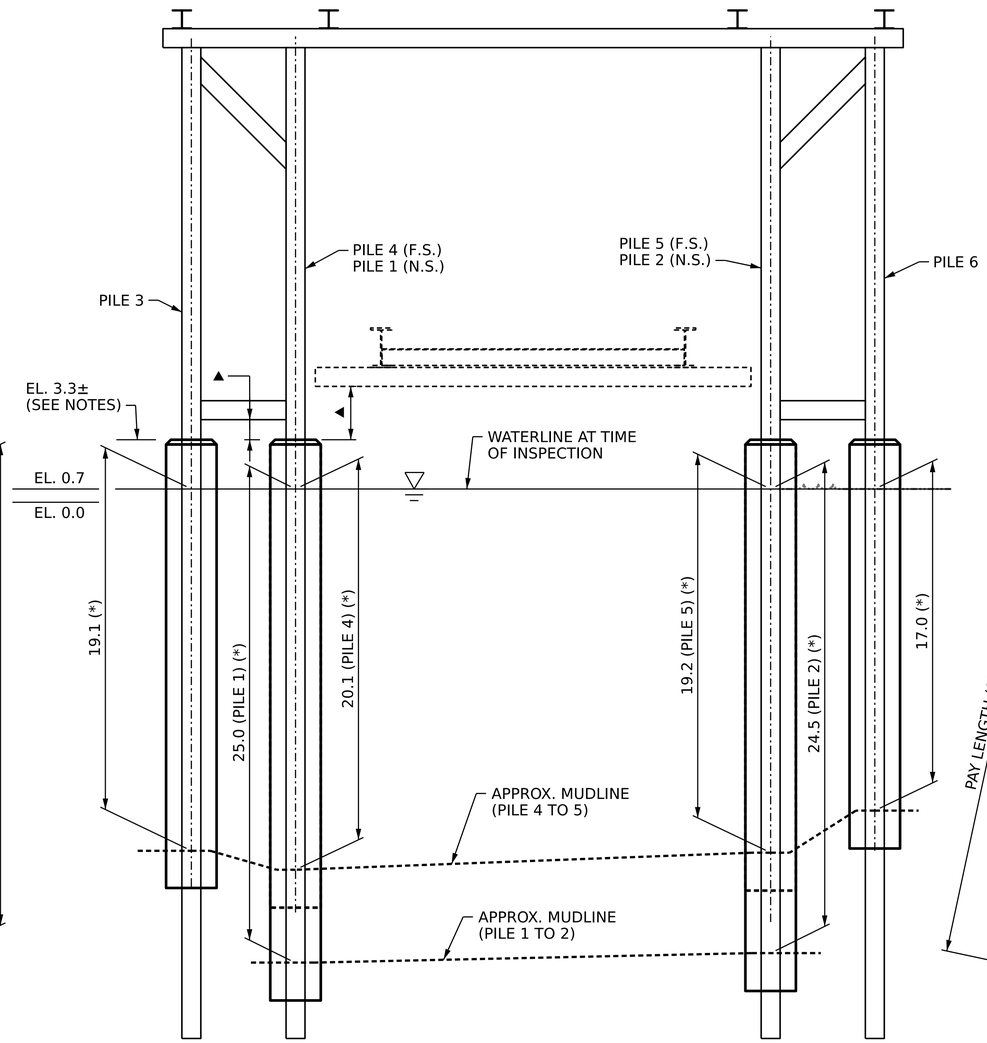

SOUTH ELEVATION

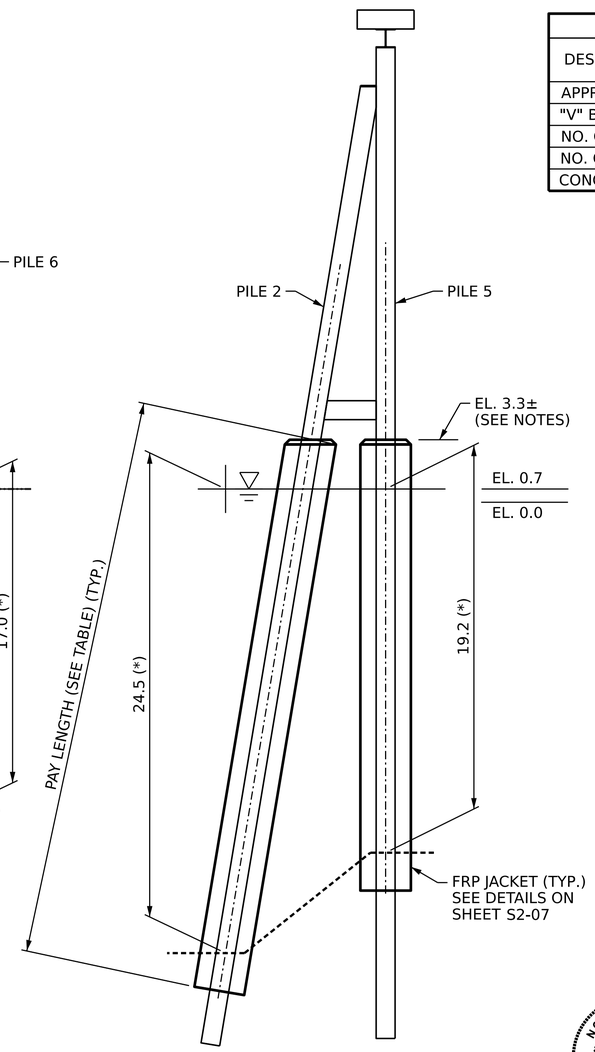

VIEW B-B

BAR TYPE

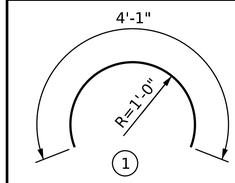

ALL BAR DIMENSIONS ARE OUT-TO-OUT

BILL OF MATERIAL

BAR	NO.	SIZE	TYPE	LENGTH	WEIGHT
* D1	93	#6	STR	2'-0"	246
* V1	8	#6	STR	26'-8"	321
* V2	8	#6	STR	26'-2"	315
* V3	8	#6	STR	20'-9"	250
* V4	8	#6	STR	21'-9"	262
* V5	8	#6	STR	20'-10"	251
* V6	8	#6	STR	18'-8"	225
* S1	276	#4	1	4'-1"	753
* EPOXY COATED BARS					
EPOXY COATED REINFORCING STEEL (LBS.)					2548
CLASS A CONCRETE (CU. YDS.)					21.8
CONCRETE PILE JACKETS (LIN. FT.)					151.0

PILE JACKET QUANTITY TABLE

DESCRIPTION	PILE NUMBER					
	1	2	3	4	5	6
APPROX. PAY LENGTH (FT)	29.35	28.85	23.45	24.45	23.55	21.35
"V" BAR MARK	V1	V2	V3	V4	V5	V6
NO. OF #6D1 DOWELS	18	18	14	15	14	13
NO. OF #4S1 STIRRUP PAIRS	27	27	21	22	22	19
CONCRETE FILL (CU. YDS.)	4.3	4.2	3.4	3.5	3.4	3.0

NOTES

* SOUNDINGS TAKEN FROM UNDERWATER INSPECTION (BY CONSOR DATED NOVEMBER 2ND, 2023) ARE PROVIDED FOR INFORMATION ONLY. CONTRACTOR SHALL FIELD VERIFY MUDLINE ELEVATIONS AND NOTIFY ENGINEER IN WRITING OF ANY DISCREPANCIES PRIOR TO ORDERING MATERIALS OR PERFORMING ANY REPAIR WORK.

▲ - THE PROPOSED ELEVATION OF THE TOP OF THE PILE JACKETS SHOWN ON THESE PLANS IS BASED ON EXISTING PLANS DATA. CONTRACTOR SHALL WORK WITH THE ENGINEER AND NCDOT FERRY DIVISION STAFF TO MEASURE THE LOWEST POSITION OF THE STEEL RAMP STRUCTURE DURING OPERATIONS AND SHALL SET THE TOP OF PILE JACKETS TO AVOID INHIBITING OPERATION OF THE STEEL RAMP AND TO AVOID INTERFERENCE WITH THE LIFT BENT BRACING MEMBERS.

BENT DIMENSIONS AND ELEVATIONS ARE APPROXIMATE AND ARE TAKEN FROM EXISTING PLANS.

EXISTING PILES ARE HP12x53 STEEL PILES.

PILE JACKETS SHALL BE EMBEDDED A MINIMUM OF 2'-0" BELOW THE MUDLINE. SEE DETAILS ON SHEET S2-07.

FOR "PILE JACKETS" SEE SPECIAL PROVISIONS.

PILE JACKET LENGTH SHALL NOT BE LESS THAN 4'-0" REGARDLESS OF MUDLINE ELEVATION.

FOR PILE JACKET DETAILS, SEE SHEET S2-07.

PROJECT NO. 15BPR.164

BEAUFORT COUNTY

TERMINAL: BAYVIEW

STATE OF NORTH CAROLINA
DEPARTMENT OF TRANSPORTATION
RALEIGH

LIFT BENT PILE JACKET REPAIR DETAILS

NORTH CAROLINA PROFESSIONAL SEAL 045005 ENGINEER DAVID KNICKERBOCKER
7/16/2026
DAVID KNICKERBOCKER

REVISIONS						
NO.	BY:	DATE:	NO.	BY:	DATE:	
1	--	--	3	--	--	
2	--	--	4	--	--	

SHEET NO. S2-06
TOTAL SHEETS 34

DES BY: B. BINOWSKI	DATE: 11/2025	DWG BY: B. PETERSON	DATE: 11/2025
DES CHK: D. KNICKERBOCKER	DATE: 11/2025	CHK BY: D. KNICKERBOCKER	DATE: 11/2025

HDR Engineering, Inc. of the Carolinas
555 Fayetteville St., Suite 900 Raleigh, N.C. 27601
N.C.B.E.L.S. License Number: F-0116

DOCUMENT NOT CONSIDERED FINAL UNLESS ALL SIGNATURES COMPLETED

Docusign Envelope ID: 500D4102-4BD1-8175-811B-AF137D171DE3

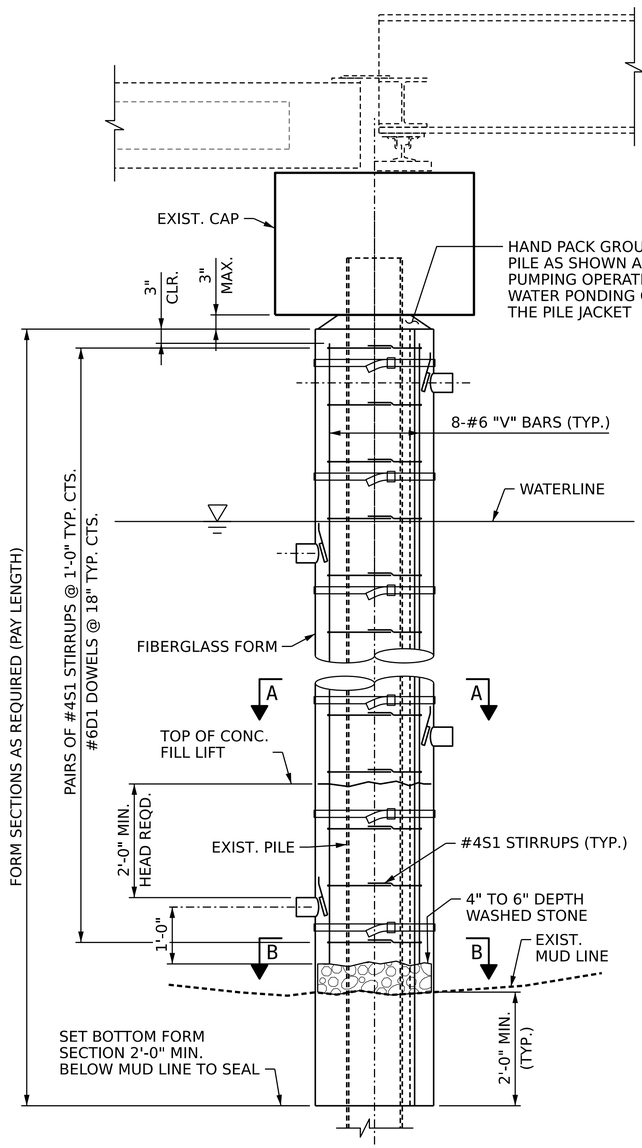

DETAIL AT BENT 2

(FOR CALLOUTS AND DIMENSIONS NOT SHOWN, SEE "DETAIL AT LIFT BENT")

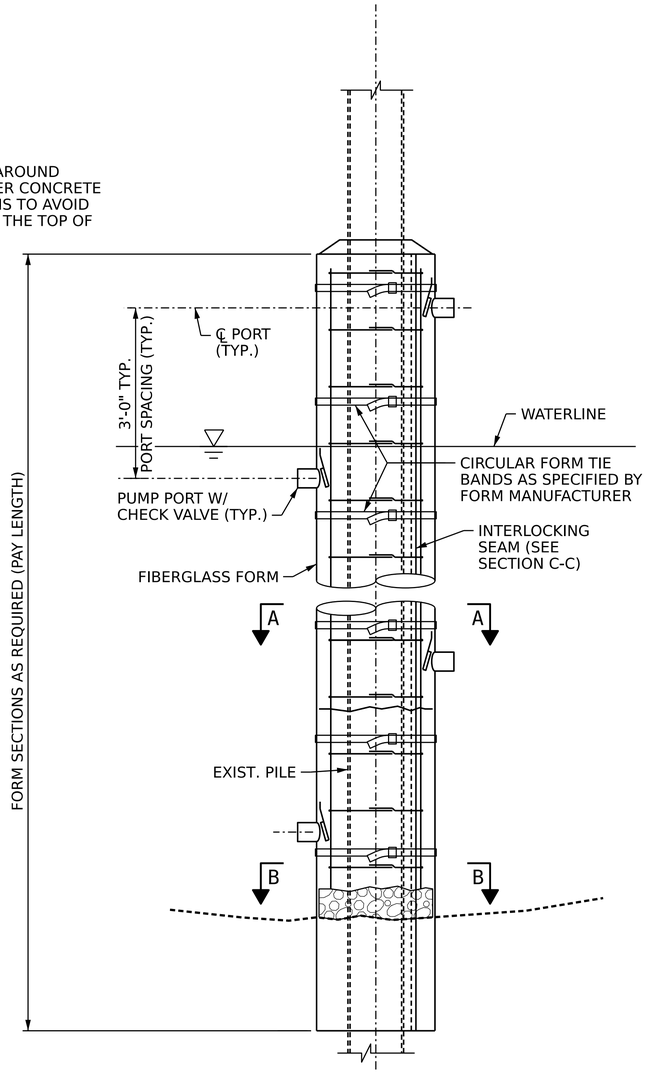

DETAIL AT LIFT BENT

(FOR CALLOUTS AND DIMENSIONS NOT SHOWN, SEE "DETAIL AT BENT BENT 2")

FRP PILE JACKET DETAILS

(STEEL PILE REPAIRS NOT SHOWN)

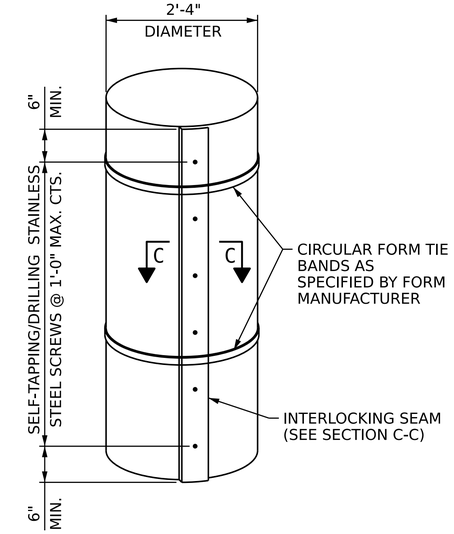

FRP PILE JACKET FORM

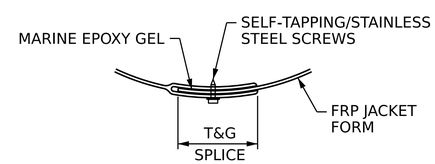

SECTION C-C

INTERLOCKING SEAM DETAIL

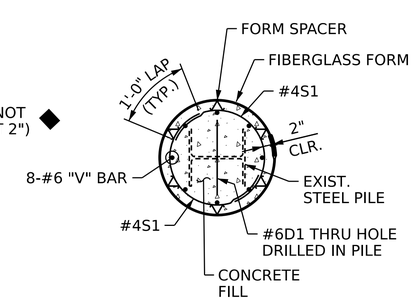

SECTION A-A

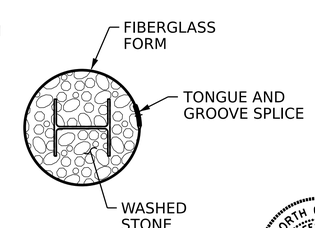

SECTION B-B

JACKET NOTES

FOR PILE JACKETS, SEE SPECIAL PROVISIONS.

CONCRETE AND REINFORCING STEEL SHALL BE IN ACCORDANCE WITH THE REQUIREMENTS OF THE STANDARD SPECIFICATIONS.

ALL REINFORCING STEEL SHALL BE ASTM A615 GRADE 60 AND SHALL BE EPOXY COATED IN ACCORDANCE WITH ASTM A775.

SURFACES OF PILES TO BE ENCASED IN CONCRETE SHALL BE CLEANED AS DESCRIBED IN SPECIAL PROVISIONS. CLEANING MUST BE DONE IMMEDIATELY BEFORE FORMS ARE INSTALLED.

SHOP DRAWINGS SHALL BE SUBMITTED TO THE ENGINEER FOR APPROVAL SHOWING ALL FASTENING DETAILS, STANDOFFS, FORMS AND ANY OTHER DEVICES NECESSARY TO SECURE THE FORMS SO THAT CONCRETE MAY BE PLACED IN A CONTINUOUS OPERATION COMPLETELY ENCAPSULATING THE PILES.

FORMS FOR JACKET SHALL BE INSTALLED IN ACCORDANCE WITH APPROVED SHOP DRAWINGS. BOTTOM SEAL SHALL BE WATER TIGHT.

DETAILS OF PUMP PORTS WITH CHECK VALVE SHALL BE DETERMINED BY SUPPLIER.

CONCRETE AT THE TOP OF THE JACKET SHALL BE DOMED TO PREVENT PONDING. THE INERFACE OF THE PILE AND THE CONCRETE AT THIS LOCATION SHALL BE SEALED WITH AN APPROVED SEALANT.

REPAIR SEQUENCE

1. REMOVE LOOSE RUST AND MARINE GROWTH FROM THE EXISTING STEEL PILE TO OBTAIN A CLEAN, SOUND SURFACE PRIOR TO PERFORMING STEEL REPAIRS AND PILE JACKETING, USING APPROVED MECHANICAL MEANS OR HIGH-PRESSURE WATER BLASTING.
2. COMPLETE STEEL PILE REPAIRS AS SHOWN ON OTHER SHEETS.
3. DETERMINE FIBERGLASS JACKET FORM HEIGHT. MINIMUM HEIGHT IS 2 FT ABOVE AND BELOW CLEAN, SOUND AND CONTAMINANT-FREE SURFACES.
4. BUILD THE REINFORCING BAR CAGE BY PLACING THE #4 STIRRUPS AND VERTICAL REINFORCING STEEL AROUND THE PILE IN ACCORDANCE WITH THE DETAILS.
5. INSTALL FORM SPACERS TO INSURE ADEQUATE CONCRETE COVER AT ALL PARTS OF THE SLEEVE.
6. INSTALL THE FIBERGLASS JACKET FORMS. THE FIBERGLASS JACKET FORMS SHALL COMPLETELY ENCIRCLE THE PILES TO PROVIDE THE CONCRETE COVER AND CLEARANCES AS SHOWN IN SECTION A-A. THE FIBERGLASS JACKET FORMS SHALL BE SIZED TO INCLUDE AN OVERLAPPING FULL HEIGHT INTERLOCKING SEAM. SEE "PILE JACKET JOINT DETAIL".
7. INSERT CONCRETE PUMP HOSE THRU TOP OF JACKET AND EXTEND TO JUST ABOVE THE BOTTOM OF THE FIBERGLASS JACKET FORM. PUMP CONCRETE INTO FORM TO THE DESIRED FILL ELEVATION. IF SITE CONDITIONS PROHIBIT INSERTING PUMP HOSE THRU TOP OF JACKET, THEN INSTALL PUMP PORTS ALONG HEIGHT OF JACKET AS REQUIRED AND PLACE CONCRETE AS SHOWN IN THE DETAILS.
8. INSTALL PUMP PORTS IN JACKET AS REQUIRED FOR UNDERWATER APPLICATIONS. PORTS SHOULD HAVE A CHECK VALVE TO PREVENT BACK FLOW OF CONCRETE ONCE PUMP NOZZLE IS REMOVED. FOR CONCRETE PLACEMENTS GREATER THAN 5 FT HIGH USE MULTIPLE PORTS SPACED 3 FT VERTICALLY AND ALTERNATING 180 DEGREES FROM PREVIOUS PORT. A MINIMUM OF 2 FT OF CONCRETE HEAD IS NEEDED ABOVE PORT PRIOR TO CHANGING PORTS.

PROJECT NO. 15BPR.164

BEAUFORT COUNTY

TERMINAL: BAYVIEW

STATE OF NORTH CAROLINA
DEPARTMENT OF TRANSPORTATION
RALEIGH

FRP PILE JACKET DETAILS

NORTH CAROLINA PROFESSIONAL SEAL 045005 ENGINEER DAVID KNICKERBOCKER
7/16/2026
DAVID KNICKERBOCKER

REVISIONS								SHEET NO.
NO.	BY:	DATE:	NO.	BY:	DATE:			S2-07
1	--	--	3	--	--			TOTAL SHEETS
2	--	--	4	--	--			34

DES BY: B. BINOWSKI	DATE : 11/2025	DWG BY: B. PETERSON	DATE : 11/2025
DES CHK: D. KNICKERBOCKER	DATE : 11/2025	CHK BY: D. KNICKERBOCKER	DATE : 11/2025

HDR Engineering, Inc. of the Carolinas
555 Fayetteville St., Suite 900 Raleigh, N.C. 27601
N.C.B.E.L.S. License Number: F-0116

DOCUMENT NOT CONSIDERED FINAL UNLESS ALL SIGNATURES COMPLETED

Docusign Envelope ID: 500D4102-4BD1-8175-811B-AF137D171DE3

MECHANICAL SCOPE OF WORK

THE SCOPE OF WORK OF THIS PROJECT SHALL INCLUDE BUT NOT BE LIMITED TO:

1. FIELD SURVEY AND VERIFICATION
   a. THE CONTRACTOR SHALL PERFORM A FIELD SURVEY TO DETERMINE ALL EXISTING DIMENSIONS OF THE RAMP AND APPROACHES TO LOCATE ALL MECHANICAL EQUIPMENT TO BE REPAIRED OR REPLACED. THE FIELD SURVEY SHALL BE CONSIDERED INCIDENTAL TO THE LUMP SUM RAMP MECHANICAL SYSTEM REPAIR PAY ITEM.
2. HYDRAULIC EQUIPMENT
   a. REPLACEMENT OF CORRODED HYDRAULIC FITTINGS AND TUBING.
   b. REPLACEMENT OF CORRODED HYDRAULIC TUBING SUPPORTS WITH SECTION LOSS EXCEEDING 20%.
   c. FLUSHING OF THE HYDRAULIC SYSTEM.
   d. REPLACEMENT OF HYDRAULIC FLUID FILTERS.
3. LUBRICATION EQUIPMENT
   a. SUPPORTING AND RE-ROUTING OF ERRANT GREASE LINES.
   b. INSTALLATION OF LUBRICATION LINE MANIFOLD AND SUPPORT.

GENERAL MECHANICAL NOTES

SEE SPECIAL PROVISIONS FOR ADDITIONAL DETAILS, INFORMATION, AND REQUIREMENTS RELATED TO THE WORK INDICATED ON THESE PLANS.

MODEL NUMBERS AND DETAILS OF STANDARD COMPONENTS ARE BASED ON MANUFACTURERS CATALOG DATA CURRENT TO THE TIME THE DRAWINGS WERE PREPARED. THE MODELS SPECIFIED ARE ONLY TO ESTABLISH A STANDARD FOR QUALITY AND TO DEFINE PERFORMANCE REQUIREMENTS. EQUIVALENT MODELS FROM OTHER MANUFACTURERS MAY BE SUBSTITUTED AT THE OPTION OF THE CONTRACTOR AND WITH THE APPROVAL OF THE ENGINEER.

ALL FASTENER SIZES SHALL BE VERIFIED. FASTENERS SHALL BE TENSIONED IN ACCORDANCE WITH NCDOT STANDARD SPECIFICATIONS FOR ROADS AND STRUCTURES SECTION 440-8.

ALL HOLES SHALL BE DRILLED FULL SIZED UNLESS NOTED OTHERWISE.

ALL HARDWARE NOTED AS STAINLESS STEEL (SS) SHALL BE TYPE 316.

IT SHALL BE THE CONTRACTORS RESPONSIBILITY TO COORDINATE AND VERIFY THE RELATIONSHIP AND ASSEMBLY OF ALL PARTS FOR A COMPLETE WORKING SYSTEM. ALL REQUIRED MACHINING, RIGGING, LUBRICATION, PAINTING, TESTING AND ASSEMBLY SHALL BE CONSIDERED PART OF THE WORK.

ALL WORK SHALL BE DONE WITH NO INTERFERENCE TO FACILITY OPERATIONS UNLESS AUTHORIZED BY THE DEPARTMENT IN ADVANCE.

THE CONTRACTOR SHALL BE RESPONSIBLE FOR COORDINATING RAMP OPERATIONS WITH NCDOT FOR ALL WORK THAT REQUIRES SHUT DOWN OF THE MECHANICAL OPERATING SYSTEMS (EG. HYDRAULIC TUBE AND FITTING REPLACEMENT). THE BRIDGE CAN BE MANUALLY OPERATED VIA ELECTRIC HOISTS CURRENTLY ON-SITE. OPERATION VIA ELECTRIC HOISTS SHALL BE COORDINATED WITH THE DEPARTMENT INCLUDING THE NUMBER AND DURATION OF ALL MECHANICAL SYSTEM OUTAGES.

THE CONTRACTOR SHALL BE RESPONSIBLE FOR MINIMIZING LEAKAGE THROUGHOUT THE PERFORMANCE OF THE WORK. THE CONTRACTOR SHALL DOCUMENT THE HPU FLUID LEVEL PRIOR TO THE START OF WORK AND SHALL BE RESPONSIBLE FOR MAINTAINING THAT LEVEL OR BETTER FOR THE DURATION OF THE WORK.

THE CONTRACTOR SHALL PROVIDE A SPILL PREVENTION, CONTROL AND COUNTERMEASURE (SPCC) PLAN FOR REVIEW AND APPROVAL.

AFTER COMPLETION OF THE MECHANICAL WORK AND PRIOR TO FINAL ACCEPTANCE, THE HYDRAULIC FLUID SHALL BE TESTED AND CLEANED TO A MINIMUM CLEANLINESS LEVEL OF ISO 16/14/12 AND ALL FILTERS FOR THE RAMP HYDRAULIC SYSTEM SHALL BE REPLACED AND SHALL HAVE THE REPLACEMENT DATE CLEARLY INDICATED ON THE FILTER.

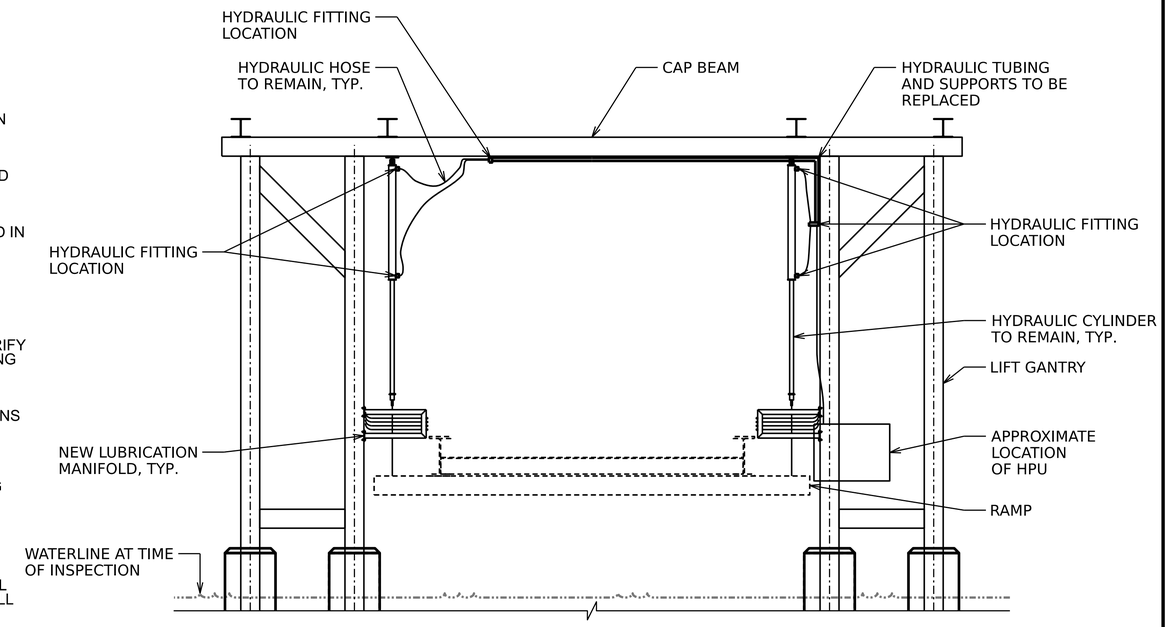

HYDRAULIC REPAIRS ELEVATION

LOOKING SOUTH
SEE HYDRAULIC REPAIRS DETAIL SHEET FOR INFORMATION ON REPAIR REQUIREMENTS
LOCATIONS OF EXISTING HYDRAULIC EQUIPMENT SHOWN ARE APPROXIMATE

ESTIMATED SUMMARY OF QUANTITIES	
HYDRAULIC TUBING	LIN. FT.: 50
HYDRAULIC FITTINGS	NO.: 10

ESTIMATED QUANTITIES ARE PROVIDED FOR BIDDING PURPOSES. ACTUAL QUANTITIES SHALL BE DETERMINED BY THE CONTRACTOR AND SHALL BE INCLUDED WITHIN THE LUMP SUM PAY ITEM "RAMP MECHANICAL REPAIR WORK".

PROJECT NO. 15BPR.164
BEAUFORT COUNTY
TERMINAL: BAYVIEW

NORTH CAROLINA PROFESSIONAL SEAL 062123 ENGINEER STEPHEN GRABOWSKI
7/16/2026
Stephen Grabowski

STATE OF NORTH CAROLINA
DEPARTMENT OF TRANSPORTATION
RALEIGH

MECHANICAL NOTES

REVISIONS						
NO.	BY:	DATE:	NO.	BY:	DATE:	
1	--	--	3	--	--	
2	--	--	4	--	--	

SHEET NO. M2-01
TOTAL SHEETS 34

DES BY: C. MORRIS DATE : 11/2025
DES CHK: S. GRABOWSKI DATE : 11/2025
DWG BY: B. PETERSON DATE : 11/2025
CHK BY: S. GRABOWSKI DATE : 11/2025

HDR Engineering, Inc. of the Carolinas
555 Fayetteville St., Suite 900 Raleigh, N.C. 27601
N.C.B.E.L.S. License Number: F-0116

DOCUMENT NOT CONSIDERED FINAL UNLESS ALL SIGNATURES COMPLETED

Docusign Envelope ID: 500D4102-4BD1-8175-811B-AF137D171DE3

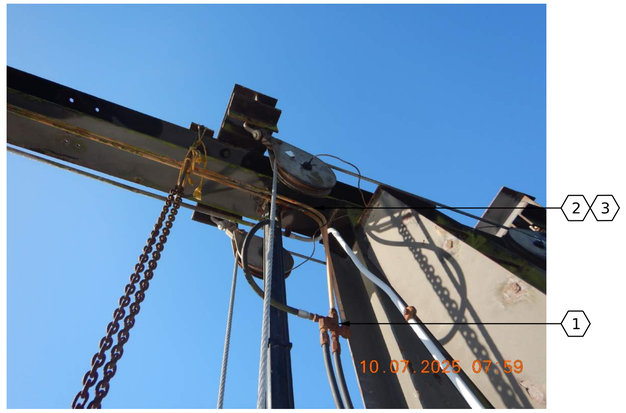

CORRODED HYDRAULIC FITTINGS

EXAMPLE LUBRICATION LINE SUPPORT MANIFOLD

IMAGE SHOWS LUBRICATION LINE MANIFOLD
AT THE AURORA SITE (BRIDGE 060321)

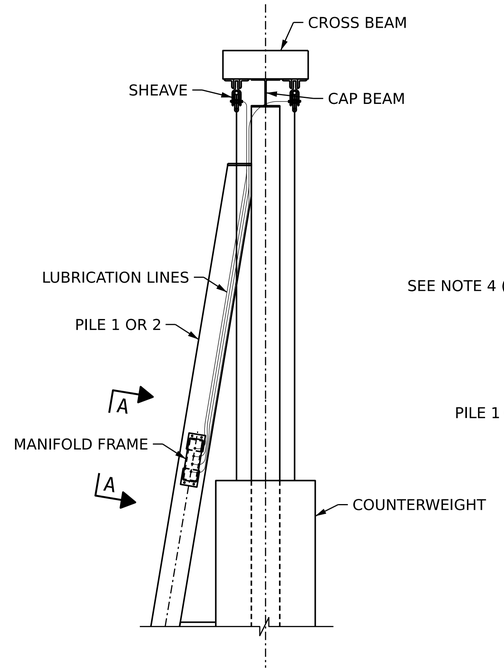

SIDE VIEW

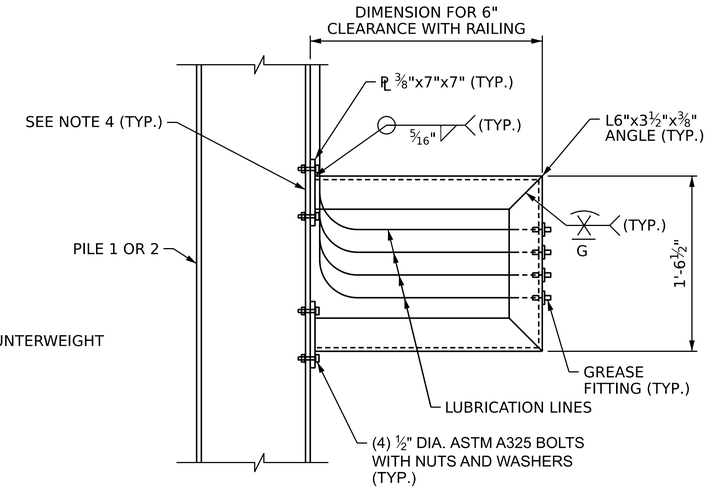

VIEW A-A

LUBRICATION LINE SUPPORT MANIFOLD DETAILS

ALL STEEL SHALL BE 316 STAINLESS STEEL
(2) ASSEMBLIES REQUIRED

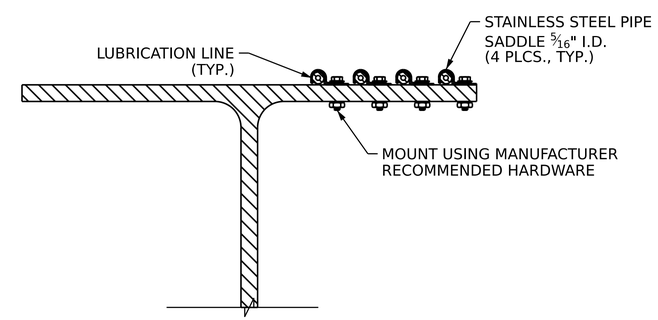

TYPICAL LUBRICATION LINE SUPPORT DETAIL

LUBRICATION LINE LOCATIONS SHOWN ARE APPROXIMATE

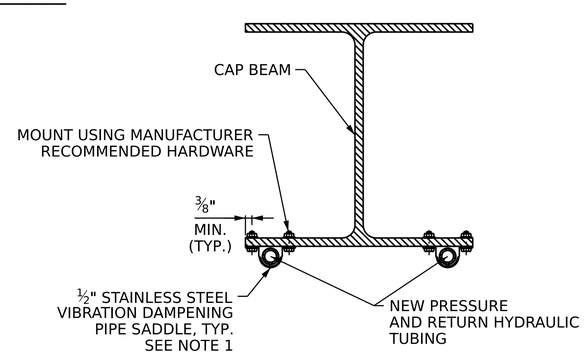

TYPICAL HYDRAULIC TUBING SUPPORT DETAIL

TUBING LOCATIONS SHOWN ARE APPROXIMATE

NOTES

1. THE CONTRACTOR SHALL SUBMIT HYDRAULIC TUBING AND LUBRICATION LINE SUPPORTS AND FITTINGS TO THE ENGINEER FOR REVIEW AND APPROVAL. SEE SPECIFICATIONS FOR REQUIREMENTS.
2. IMAGES PROVIDED SERVE AS VISUAL EXAMPLES AND SHOULD NOT BE CONSIDERED A COMPLETE CATALOG OF ALL REPAIR LOCATIONS.
3. WHERE HYDRAULIC TUBING SUPPORT MOUNTING INTERFERES WITH EXISTING BEAM GEOMETRY, SUPPORTS MAY BE STAGGERED TO ALLOW INSTALLATION CLEARANCE.
4. THE LOCATION OF THE EXISTING PILES WHERE THE NEW LUBRICATION MANIFOLD SUPPORT ARE TO BE ATTACHED SHALL BE CLEANED IN ACCORDANCE WITH SSPC-SP3 AND SHALL BE PRIME COATED IN ACCORDANCE WITH THE SPECIAL PROVISIONS PRIOR TO INSTALLATION OF THE MANIFOLD SUPPORT.

KEY NOTES

1. REPLACE ALL CORRODED HYDRAULIC FITTINGS.
2. REPLACE ALL HYDRAULIC TUBING SUPPORTS AND HARDWARE WITH SECTION LOSS BEYOND 20%. SUPPORT AT MAXIMUM EVERY 54".
3. REPLACE ALL HYDRAULIC TUBING. SEE SPECIFICATIONS FOR REQUIREMENTS.
4. INSTALL LUBRICATION LINE SUPPORT MANIFOLD. SEE DETAIL.

PROJECT NO. 15BPR.164
BEAUFORT COUNTY
TERMINAL: BAYVIEW

STATE OF NORTH CAROLINA
DEPARTMENT OF TRANSPORTATION
RALEIGH

HYDRAULIC AND LUBRICATION REPAIR DETAILS

NORTH CAROLINA PROFESSIONAL SEAL 062123 ENGINEER STEPHEN GRABOWSKI
7/16/2026
Stephen Grabowski

REVISIONS						
NO.	BY:	DATE:	NO.	BY:	DATE:	
1	--	--	3	--	--	
2	--	--	4	--	--	

SHEET NO. M2-02
TOTAL SHEETS 34

HDR Engineering, Inc. of the Carolinas
555 Fayetteville St., Suite 900 Raleigh, N.C. 27601
N.C.B.E.L.S. License Number: F-0116

DOCUMENT NOT CONSIDERED FINAL UNLESS ALL SIGNATURES COMPLETED

DES BY: C. MORRIS	DATE : 11/2025	DWG BY: B. PETERSON	DATE : 11/2025
DES CHK: S. GRABOWSKI	DATE : 11/2025	CHK BY: S. GRABOWSKI	DATE : 11/2025

Docusign Envelope ID: 500D4102-4BD1-8175-811B-AF137D171DE3

GENERAL ELECTRICAL NOTES

ALL WORK FOR THIS CONTRACT SHALL CONFORM TO REQUIREMENTS OF NFPA-70 (NATIONAL ELECTRICAL CODE), NFPA-70E, NFPA 502, AASHTO LRFD MOVABLE HIGHWAY BRIDGE DESIGN SPECIFICATIONS. SEE SPECIAL PROVISION FOR A LIST OF ALL APPLICABLE STANDARDS.

ALL WORK SHALL BE DONE WITH NO INTERFERENCE TO FACILITY OPERATIONS UNLESS AUTHORIZED BY THE DEPARTMENT IN ADVANCE.

THROUGHOUT CONSTRUCTION, THE CONTRACTOR SHALL ENSURE THAT THE RAMP REMAINS OPERATIONAL TO VEHICULAR TRAFFIC AT ALL TIMES. DURING AN ELECTRICAL OUTAGE, THE BRIDGE MAY BE OPERATED MANUALLY VIA ELECTRIC CHAIN HOISTS. OPERATION VIA ELECTRIC HOISTS SHALL BE COORDINATED WITH THE DEPARTMENT INCLUDING THE NUMBER AND DURATION OF ALL ELECTRICAL SYSTEM OUTAGES.

SOME IMAGES ARE TAKEN FROM INSPECTION REPORT DATED 11/02/2023. PRIOR TO BEGINNING ANY REPAIR WORK, FIELD VERIFY EXISTING CONDITIONS. IF EXISTING CONDITIONS VARY SIGNIFICANTLY FROM IMAGES SHOWN, CONTACT DEPARTMENT.

IMAGES PROVIDED SERVE AS VISUAL EXAMPLES AND SHOULD NOT BE CONSIDERED A COMPLETE CATALOG OF ALL INSPECTION DISCREPANCIES.

ALL CONDUITS, CONDUCTORS, AND SUPPORTS RELATED TO EQUIPMENT BEING REMOVED, SHALL ALSO BE REMOVED.

THE CONTRACTOR SHALL CONDUCT OPERATIONS IN SUCH A MANNER THAT NO WASTE, DUST, DEBRIS OR OTHER DETRIMENTAL MATERIAL SHALL ENTER THE WATER IN ACCORDANCE WITH SECTION 107 OF NCDOT'S ROADS AND STRUCTURE SPECIFICATIONS.

AT THIS TIME THERE ARE NO AS-BUILTS FOR THE EXISTING SYSTEM. ALL ITEMS SHALL BE FIELD VERIFIED BY THE CONTRACTOR, AS REQUIRED.

ALL ELECTRICAL BOXES/ENCLOSURES/CABINETS SHALL BE STAINLESS STEEL NEMA 4X.

ALL ELECTRICAL PANELBOARDS SHALL BE NEMA 12 OR 3R AND SHALL BE LOCATED INSIDE A STAINLESS STEEL NEMA 4X ENCLOSURE.

ALL STAINLESS STEEL EQUIPMENT SHALL BE 316 STAINLESS STEEL UNLESS OTHERWISE NOTED.

BLACK ENGRAVED LAMACOID LABELS SHALL BE PROVIDED FOR ALL INTERIOR CABINET/BOX/ENCLOSURE DEVICES.

THE CONTRACTOR SHALL PROVIDE A STAINLESS STEEL NAMEPLATE FOR THE FRONT OF EACH CABINET/BOX/ENCLOSURE THAT IS MODIFIED OR CONNECTED TO REGARDLESS IF AN EXISTING NAMEPLATE IS PRESENT. IF AN EXISTING NAMEPLATE EXISTS IT SHALL BE REPLACED.

THE CONTRACTOR SHALL RE RUN ANY CONDUITS AND CONDUCTORS AS REQUIRED THAT CANNOT BE EASILY REPAIRED OR CONNECTED TO NEW EQUIPMENT AT NO ADDITIONAL COST TO THE DEPARTMENT.

ELECTRICAL SCOPE OF WORK

THE SCOPE OF WORK FOR THIS PROJECT SHALL INCLUDE BUT NOT LIMITED TO THE REPAIR, TESTING AND COMMISSIONING OF THE ELECTRICAL FERRY RAMP:

1. FIELD SURVEY AND VERIFICATION
   a. THE CONTRACTOR SHALL CONDUCT FIELD VERIFICATIONS OF ALL FIELD EQUIPMENT TO VERIFY CONDITIONS, AS REQUIRED, TO PERFORM REPAIRS. THIS INCLUDES BUT NOT LIMITED TO THE EXISTING CONDUIT, CONDUCTORS, CONDUCTOR LABELS, AND CONTRACT PLANS.
2. LIGHTING
   a. THE CONTRACTOR SHALL FURNISH AND INSTALL NEW LIGHTING FIXTURES.
3. CONDUIT AND WIRING
   a. THE CONTRACTOR SHALL FURNISH AND INSTALL, AS REQUIRED, CONDUIT, BOXES, AND CONDUCTORS AND ALL OTHER NEW EQUIPMENT SPECIFIED IN THE PLANSET.
   b. THE CONTRACTOR SHALL FULLY INTEGRATE ALL ELECTRICAL REPAIRS INTO THE EXISTING/REMAINING ELECTRICAL SYSTEMS.
4. RACEWAY AND FUEL BOX
   a. THE CONTRACTOR SHALL DEMOLISH AND REMOVE THE EXISTING RACEWAY AND FUEL BOX.
   b. THE CONTRACTOR SHALL FURNISH AND INSTALL, AS REQUIRED, RACEWAY, RACEWAY SUPPORTS, FUEL BOX AND NECESSARY EQUIPMENT ON BOTH SIDES OF THE GANTRY.
5. TESTING AND COMMISSIONING
   a. FOLLOWING INSTALLATION, THE CONTRACTOR SHALL COMMISSION AND TEST TO SHOW THAT EQUIPMENT IS INSTALLED PROPERLY. ALL EQUIPMENT SHALL BE OPERATED TO THE SATISFACTION OF THE ENGINEER AND A TESTING PROCEDURE SHALL BE SUBMITTED TO RECORD THE TESTING OF ALL EQUIPMENT.

PROJECT NO. 15BPR.164
BEAUFORT COUNTY
TERMINAL: BAYVIEW

STATE OF NORTH CAROLINA
DEPARTMENT OF TRANSPORTATION
RALEIGH

ELECTRICAL GENERAL NOTES

NORTH CAROLINA PROFESSIONAL SEAL 060158 ENGINEER DRAKE J. COLE
7/16/2026
DRAKE COLE

DES BY: M. TORRES	DATE : 11/2025	DWG BY: B. PETERSON	DATE : 11/2025
DES CHK: D. COLE	DATE : 11/2025	CHK BY: D. COLE	DATE : 11/2025

HDR Engineering, Inc. of the Carolinas
555 Fayetteville St., Suite 900 Raleigh, N.C. 27601
N.C.B.E.L.S. License Number: F-0116

DOCUMENT NOT CONSIDERED FINAL UNLESS ALL SIGNATURES COMPLETED

REVISIONS						SHEET NO.
NO.	BY:	DATE:	NO.	BY:	DATE:	E2-01
1	--	--	3	--	--	TOTAL SHEETS
2	--	--	4	--	--	34

Docusign Envelope ID: 500D4102-4BD1-8175-811B-AF137D171DE3

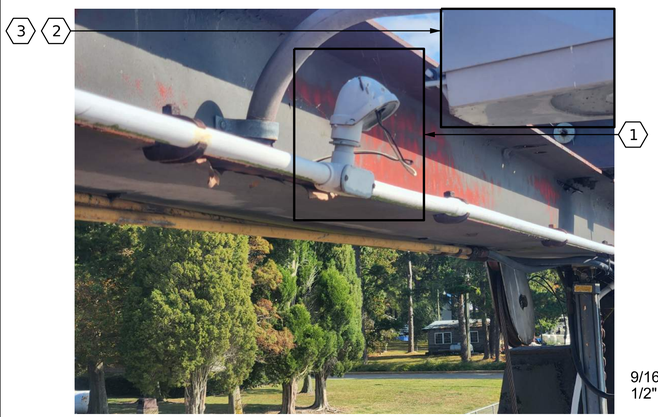

GANTRY LIGHT ELECTRICAL WIRES NOT IN CONDUIT

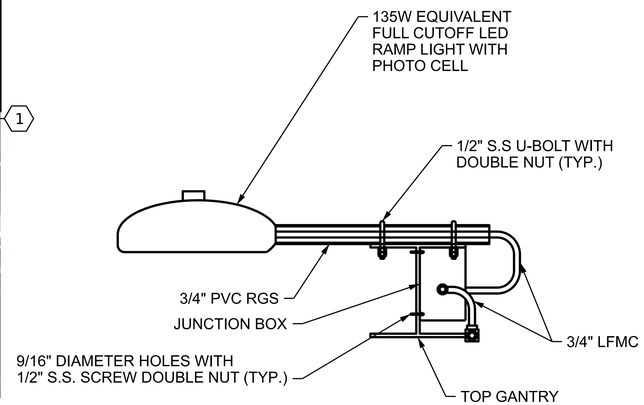

LED RAMP LIGHT DETAIL

KEY NOTES

1. THE CONTRACTOR SHALL REMOVE THE EXISTING WEATHER HEAD AND INSTALL A NEW NEMA 4X STAINLESS STEEL JUNCTION BOX TO CONNECT TO THE EXISTING CONDUIT. LFMC CONDUIT OR APPROVED EQUAL SHALL BE USED TO CONNECT JUNCTION BOX TO LUMINAIRE.
2. THE CONTRACTOR SHALL DISCONNECT, DEMOLISH, AND REMOVE THE EXISTING LIGHTING FIXTURE. THE CONTRACTOR SHALL INSTALL NEW LED FLOOD LIGHT MODEL 53XH22 FROM AMERICAN ELECTRIC OR APPROVED EQUAL.
3. REPLACEMENT LIGHTING TO PROVIDE OF A MINIMUM OF 15 FC ON THE FERRY RAMP. THE CONTRACTOR IS RESPONSIBLE TO ORIENT THE FIXTURE AS REQUIRED.

PROJECT NO. 15BPR.164
BEAUFORT COUNTY
TERMINAL: BAYVIEW

STATE OF NORTH CAROLINA
DEPARTMENT OF TRANSPORTATION
RALEIGH

AREA LIGHTING REPAIR DETAILS

NORTH CAROLINA PROFESSIONAL SEAL 060158 ENGINEER DRAKE J. COLE
7/16/2026
DRAKE COLE

REVISIONS						SHEET NO.
NO.	BY:	DATE:	NO.	BY:	DATE:	E2-02
1	--	--	3	--	--	TOTAL SHEETS
2	--	--	4	--	--	34

HDR Engineering, Inc. of the Carolinas
555 Fayetteville St., Suite 900 Raleigh, N.C. 27601
N.C.B.E.L.S. License Number: F-0116

DOCUMENT NOT CONSIDERED FINAL UNLESS ALL SIGNATURES COMPLETED

DES BY: M. TORRES	DATE : 11/2025	DWG BY: B. PETERSON	DATE : 11/2025
DES CHK: D. COLE	DATE : 11/2025	CHK BY: D. COLE	DATE : 11/2025

Docusign Envelope ID: 500D4102-4BD1-8175-811B-AF137D171DE3

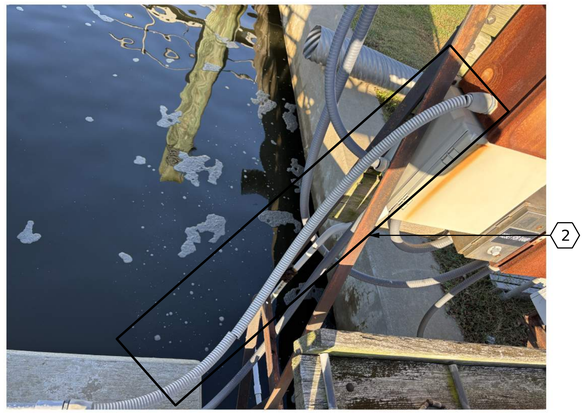

MAIN PANEL FLEXIBLE CONDUIT

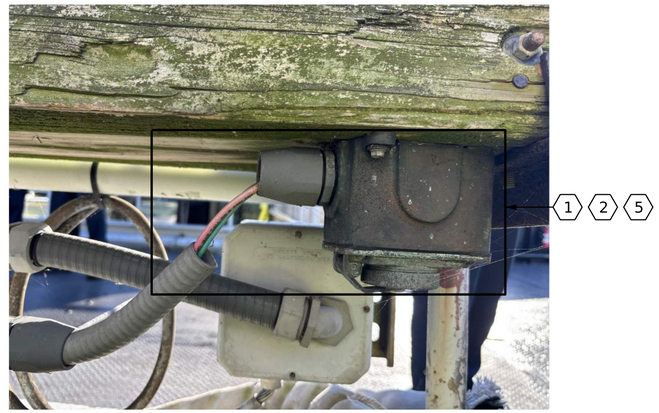

FLEXIBLE CONDUIT DISCONNECTED FROM TWIST-LOCK MARINE RECEPTACLE

FLEXIBLE CONDUIT FITTING LOOSE ON LIGHTING JUNCTION BOX

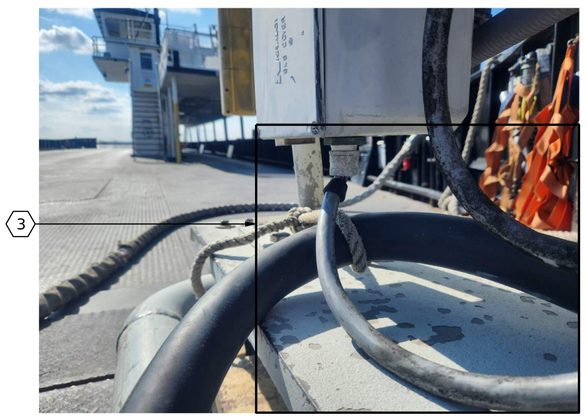

FLEXIBLE CONDUIT PULLED OFF JUNCTION BOX FITTING

BAYVIEW PENDANT SUPPORT

NOTES

1. CONDUITS SHALL BE SUPPORTED A MINIMUM OF EVERY 6'.
2. ALL WELDS TO BE ¼" UNLESS OTHERWISE NOTED. WELDING SHALL CONFORM TO AWS D1.1.
3. THE CONTRACTOR SHALL BE RESPONSIBLE FOR TEMPORARILY SUPPORTING THE EXISTING FUEL RACEWAY TO REMAIN WHILE REPLACING THE CONDUITS AND RACEWAY SUPPORTS.

KEY NOTES

1. THE CONTRACTOR SHALL REMOVE ANY BROKEN/MISSING/UNIFORMLY CORRODED/ZIP-TIED CONDUIT SUPPORTS AND REPLACE WITH STAINLESS STEEL CONDUIT CLAMPS, AS REQUIRED. NEW CONDUIT SUPPORTS SHALL BE INSTALLED, AS REQUIRED.
2. THE CONTRACTOR SHALL REPLACE BROKEN/MISSING/CORRODED/DETACHED CONDUIT FITTINGS.
3. THE CONTRACTOR SHALL REPLACE BROKEN/DAMAGED CONDUIT WITH LFMC.
4. THE CONTRACTOR SHALL REMOVE SO CABLE AND INSTALL LFMC CONDUIT OR APPROVED EQUAL TO CONNECT FERRY RAMP PENDANT TO JUNCTION BOX. THE CONTRACTOR SHALL REPLACE CONDUIT FITTINGS AS REQUIRED. ADDITIONALLY, THE CONTRACTOR SHALL INSTALL NEW CONDUIT SUPPORT CLAMPS AS REQUIRED.
5. THE CONTRACTOR SHALL MOUNT THE SHIP TO SHOW RECEPTACLE TO THE EXISTING FERRY RAMP GIRDER. REPLACE RECEPTACLE AS REQUIRED.

PROJECT NO. 15BPR.164
BEAUFORT COUNTY
TERMINAL: BAYVIEW

STATE OF NORTH CAROLINA
DEPARTMENT OF TRANSPORTATION
RALEIGH

CONDUIT REPAIR DETAILS

NORTH CAROLINA PROFESSIONAL SEAL 060158 ENGINEER DRAKE J. COLE
7/16/2026
DRAKE COLE

HDR Engineering, Inc. of the Carolinas
555 Fayetteville St., Suite 900 Raleigh, N.C. 27601
N.C.B.E.L.S. License Number: F-0116

DOCUMENT NOT CONSIDERED FINAL UNLESS ALL SIGNATURES COMPLETED

REVISIONS						
NO.	BY:	DATE:	NO.	BY:	DATE:	
1	--	--	3	--	--	
2	--	--	4	--	--	

SHEET NO. E2-03
TOTAL SHEETS 34

DES BY: M. TORRES	DATE : 11/2025	DWG BY: B. PETERSON	DATE : 11/2025
DES CHK: D. COLE	DATE : 11/2025	CHK BY: D. COLE	DATE : 11/2025

Docusign Envelope ID: 500D4102-4BD1-8175-811B-AF137D171DE3

CORRODED CONDUIT SUPPORT ATTACHED TO RACEWAY

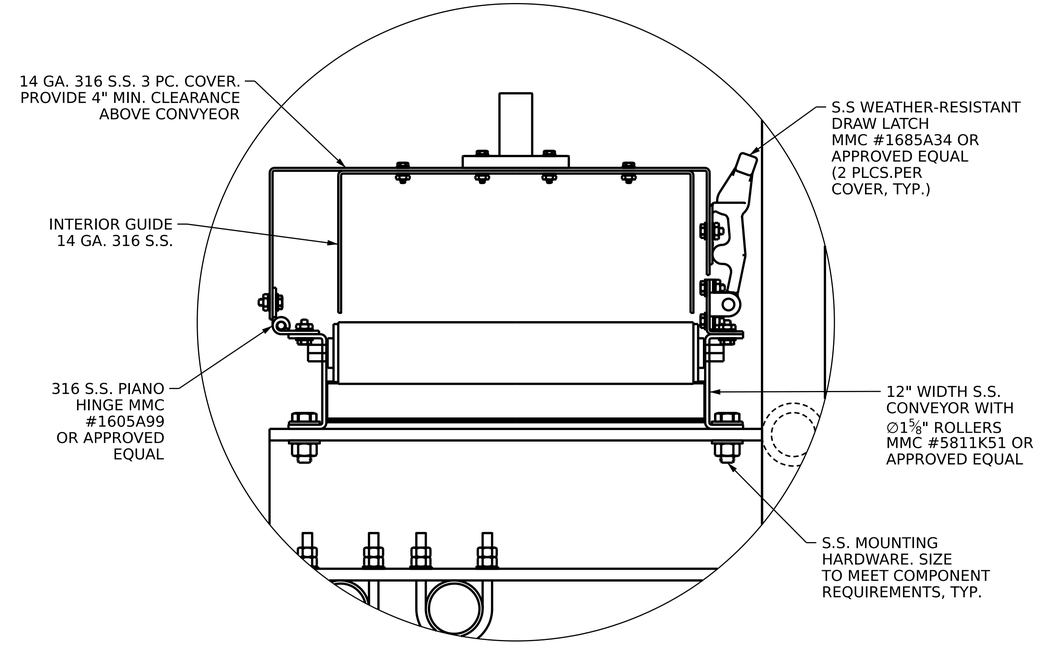

COVER DETAIL

NOTES

1. ALL WELDS TO BE ¼" UNLESS OTHERWISE NOTED. WELDING SHALL CONFORM TO AWS D1.1.
2. DIMENSIONS SHOWN ARE APPROXIMATE. CONTRACTOR SHALL VERIFY WITH MANUFACTURER FOR DIMENSIONS.
3. COORDINATE LOCATION OF FUEL DRIP TANK WITH NCDOT MAINTENANCE PERSONNEL.
4. LOCATION OF CONDUIT SUPPORT U-BOLTS ON RACEWAY CHANNEL SHALL BE SPACED TO ALLOW CLEARANCE BETWEEN CONDUITS AND FUEL LINE WHEN PLACED IN FUEL DRIP TANK.
5. AT ENDS OF RACEWAY, CONTRACTOR SHALL SMOOTH CUT END OR EDGES AND INSTALL WEATHER STRIPPING MATERIAL.
6. RACEWAY MOUNTING DETAILS SHOWN FOR THE HANDRAIL ARE TYP. FOR THE APPROACH GUARD RAILS. THE CONTRACTOR SHALL POSITION THE APPROACH RACEWAY SUCH THAT ADEQUATE CLEARANCE IS PROVIDED FOR THE ELECTRICAL PEDESTAL EQUIPMENT. CONDUITS TO BE MODIFIED AS REQUIRED FOR INSTALLATION OF THE RACEWAY.
7. TAPERED WASHERS SHALL BE USED WHEN MOUNTING EQUIPMENT TO THE TOP OR BOTTOM FLANGES OF C-CHANNEL SECTIONS.
8. THE VERTICAL EDGE OF THE C4X7.25 SHALL BE COPED TO MATCH THE O.D. OF THE VERTICAL HANDRAIL PIPE PRIOR TO WELDING.

KEY NOTES

1. THE CONTRACTOR SHALL DEMOLISH AND REMOVE THE EXISTING RACEWAY AND REPLACE WITH CONDUIT AND RACEWAY SUPPORTS ACCORDING TO DETAILS REPRESENTED IN SHEET E2-04.
2. THE CONTRACTOR SHALL RELOCATE THE EXISTING FUEL DRIP TANK AS PART OF THE SCOPE OF THIS WORK.
3. THE CONTRACTOR SHALL SUBMIT MOUNTING DETAILS FOR THE EXISTING FUEL DRIP TANK TO THE EXISTING GIRDER FOR REVIEW AND APPROVAL. FUEL DRIP BOX IS REQUIRED ONLY ON THE UPRIVER SIDE TO MATCH EXISTING CONFIGURATION.

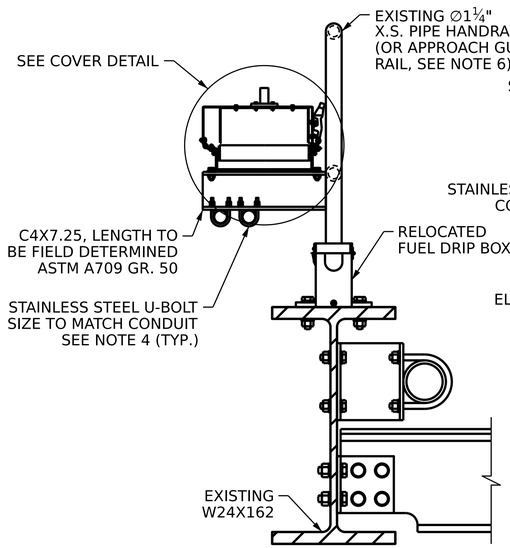

SECTION A-A

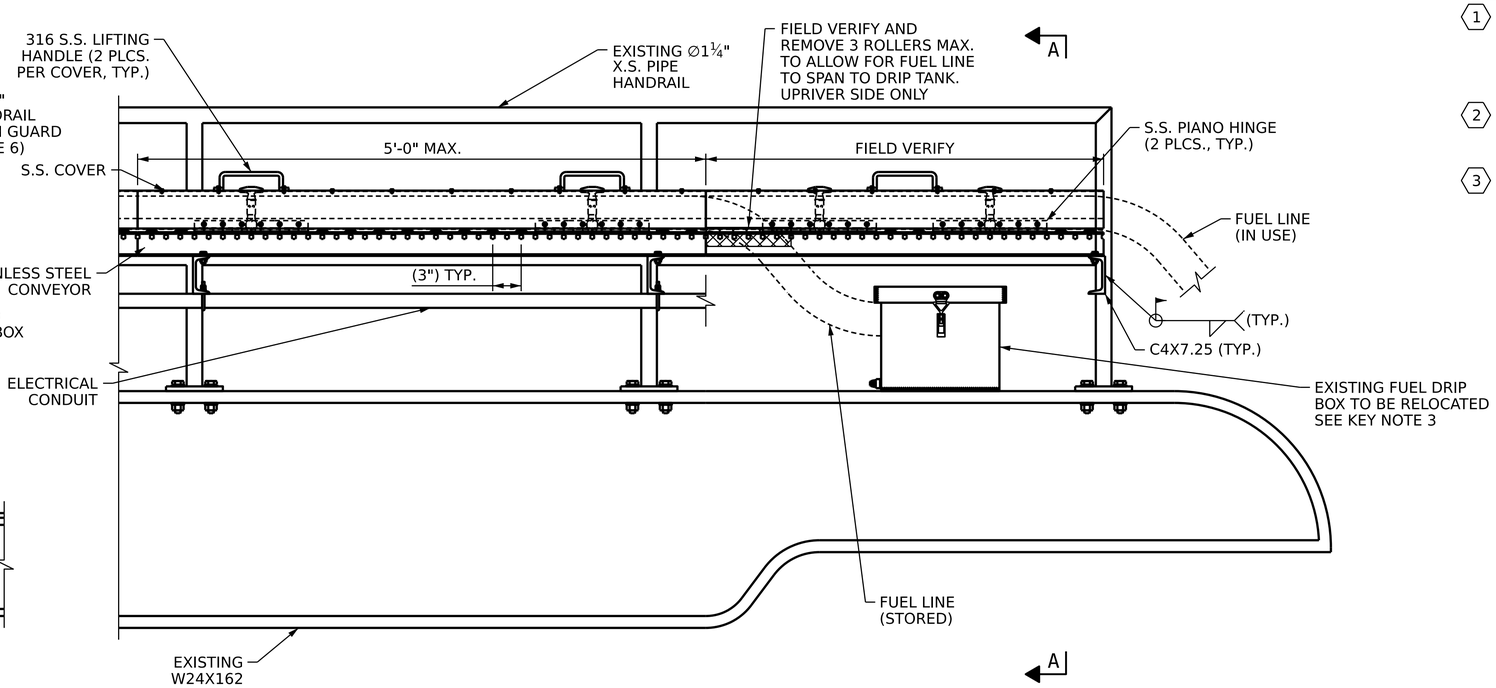

CONDUIT AND RACEWAY SUPPORT DETAIL

PROJECT NO. 15BPR.164

BEAUFORT COUNTY

TERMINAL: BAYVIEW

STATE OF NORTH CAROLINA
DEPARTMENT OF TRANSPORTATION
RALEIGH

RACEWAY REPAIR DETAILS

NORTH CAROLINA PROFESSIONAL SEAL 060158 ENGINEER DRAKE J. COLE
7/16/2026
DRAKE COLE

REVISIONS						
NO.	BY:	DATE:	NO.	BY:	DATE:	
1	--	--	3	--	--	
2	--	--	4	--	--	

SHEET NO. E2-04

TOTAL SHEETS 34

DES BY: M. TORRES	DATE : 11/2025	DWG BY: B. PETERSON	DATE : 11/2025
DES CHK: D. COLE	DATE : 11/2025	CHK BY: D. COLE	DATE : 11/2025

HDR Engineering, Inc. of the Carolinas
555 Fayetteville St., Suite 900 Raleigh, N.C. 27601
N.C.B.E.L.S. License Number: F-0116

DOCUMENT NOT CONSIDERED FINAL UNLESS ALL SIGNATURES COMPLETED

Docusign Envelope ID: 500D4102-4BD1-8175-811B-AF137D171DE3

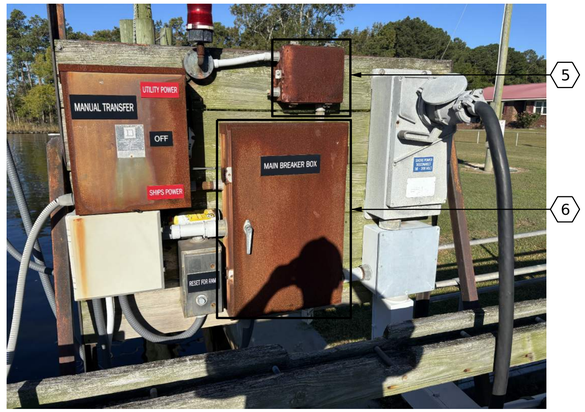

BAYVIEW ELECTRICAL PEDESTAL

TRANSFORMER JUNCTION BOX

MOTOR STARTER JUNCTION BOX

FAILED PROTECTIVE COVER SEAL ON RESET PUSHBUTTON

DAMAGED CONDUIT FITTING FOR FIBERGLASS JUNCTION BOX

NOTES

1. THE CONTRACTOR SHALL ENSURE ACCESS TO ELECTRICAL PEDESTAL IS NOT HINDERED OR DENIED AT ANY POINT.

KEY NOTES

1. THE CONTRACTOR SHALL CLEAN AND REMOVE DEBRIS FROM THE INTERIOR OF BOXES/ENCLOSURES/CABINETS.
2. THE CONTRACTOR SHALL REMOVE FIBERGLASS ENCLOSURE AND REPLACE WITH NEW, APPROPRIATELY SIZED NEMA 4X ENCLOSURE AND SHALL REPLACE THE 4" CONDUIT AND CONDUCTORS. ADJUST CONDUIT LOCATION FOR THE NEW FUEL RACEWAY AS REQUIRED. AN EXPANSION FITTING SHALL BE ADDED AT THE BRIDGE EXPANSION JOINT.
3. THE CONTRACTOR SHALL INSTALL SEPARATE NEMA 4X OR APPROVED EQUAL TERMINATION CABINET. CONDUCTORS SHALL BE REROUTED AND TERMINATED IN NEW TERMINATION CABINET.
4. CONTRACTOR TO REPLACE AND INSTALL NEW PROTECTIVE COVER SEAL FOR RESET PUSH BUTTON.
5. THE CONTRACTOR SHALL REMOVE CORRODED BOX/ENCLOSURE/CABINET. THE CONTRACTOR SHALL REPLACE WITH NEW NEMA 4X BOX/ENCLOSURE/CABINET OR APPROVED EQUAL. EXISTING CONDUIT AND CONDUCTOR CONNECTIONS ARE TO BE REUTILIZED. IF THEY CANNOT BE REUTILIZED, THEY SHALL BE RE RAN AT NO ADDITIONAL COST TO THE DEPARTMENT.
6. THE CONTRACTOR SHALL REMOVE PANELBOARD AND ENCLOSURE. NEW NEMA 4X ENCLOSURE WILL BE INSTALLED WITH NEMA 12 OR 3R PANELBOARD INSIDE ENCLOSURE. EXISTING CONDUIT AND CONDUCTOR CONNECTIONS ARE TO BE REUTILIZED. IF THEY CANNOT BE REUTILIZED, THEY SHALL BE RE RAN AT NO ADDITIONAL COST TO THE DEPARTMENT.

PROJECT NO. 15BPR.164
BEAUFORT COUNTY
TERMINAL: BAYVIEW

NORTH CAROLINA PROFESSIONAL SEAL 060158 ENGINEER DRAKE J. COLE
7/16/2026
DRAKE COLE

STATE OF NORTH CAROLINA
DEPARTMENT OF TRANSPORTATION
RALEIGH

JUNCTION BOX REPAIR DETAILS

REVISIONS						SHEET NO.
NO.	BY:	DATE:	NO.	BY:	DATE:	E2-05
1	--	--	3	--	--	TOTAL SHEETS
2	--	--	4	--	--	34

HDR Engineering, Inc. of the Carolinas
555 Fayetteville St., Suite 900 Raleigh, N.C. 27601
N.C.B.E.L.S. License Number: F-0116

DOCUMENT NOT CONSIDERED FINAL UNLESS ALL SIGNATURES COMPLETED

DES BY: M. TORRES	DATE : 11/2025	DWG BY: B. PETERSON	DATE : 11/2025
DES CHK: D. COLE	DATE : 11/2025	CHK BY: D. COLE	DATE : 11/2025

Docusign Envelope ID: 500D4102-4BD1-8175-811B-AF137D171DE3

STANDARD NOTES

DESIGN DATA:

SPECIFICATIONS	AASHTO (CURRENT)
LIVE LOAD	SEE PLANS
IMPACT ALLOWANCE	SEE AASHTO
STRESS IN EXTREME FIBER OF STRUCTURAL STEEL - AASHTO M270 GRADE 36	20,000 LBS. PER SQ. IN.
- AASHTO M270 GRADE 50W	27,000 LBS. PER SQ. IN.
- AASHTO M270 GRADE 50	27,000 LBS. PER SQ. IN.
REINFORCING STEEL IN TENSION - GRADE 60	24,000 LBS. PER SQ. IN.
CONCRETE IN COMPRESSION	1,200 LBS. PER SQ. IN.
CONCRETE IN SHEAR	SEE AASHTO
STRUCTURAL TIMBER - TREATED OR UNTREATED EXTREME FIBER STRESS	1,800 LBS. PER SQ. IN.
COMPRESSION PERPENDICULAR TO GRAIN OF TIMBER	375 LBS. PER SQ. IN.
EQUIVALENT FLUID PRESSURE OF EARTH	30 LBS. PER CU. FT. (MINIMUM)

MATERIAL AND WORKMANSHIP:

EXCEPT AS MAY OTHERWISE BE SPECIFIED ON PLANS OR IN THE SPECIAL PROVISIONS, ALL MATERIAL AND WORKMANSHIP SHALL BE IN ACCORDANCE WITH THE 2024 "STANDARD SPECIFICATIONS FOR ROADS AND STRUCTURES" OF THE N. C. DEPARTMENT OF TRANSPORTATION.

STEEL SHEET PILING FOR PERMANENT OR TEMPORARY APPLICATIONS SHALL BE HOT ROLLED.

CONCRETE:

UNLESS OTHERWISE REQUIRED ON PLANS, CLASS A CONCRETE SHALL BE USED FOR ALL PORTIONS OF ALL STRUCTURES WITH THE EXCEPTION THAT: CLASS AA CONCRETE SHALL BE USED IN BRIDGE SUPERSTRUCTURES, ABUTMENT BACKWALLS, AND APPROACH SLABS; AND CLASS B CONCRETE SHALL BE USED FOR SLOPE PROTECTION AND RIP RAP.

CONCRETE CHAMFERS:

UNLESS OTHERWISE NOTED ON THE PLANS, ALL EXPOSED CORNERS ON STRUCTURES SHALL BE CHAMFERED ¾" WITH THE FOLLOWING EXCEPTIONS: TOP CORNERS OF CURBS MAY BE ROUNDED TO 1½" RADIUS WHICH IS BUILT INTO CURB FORMS; CORNERS OF TRANSVERSE FLOOR EXPANSION JOINTS SHALL BE ROUNDED WITH A ¼" FINISHING TOOL UNLESS OTHERWISE REQUIRED ON PLANS; AND CORNERS OF EXPANSION JOINTS IN THE ROADWAY FACES AND TOPS OF CURBS AND SIDEWALKS SHALL BE ROUNDED TO A ¼" RADIUS WITH A FINISHING STONE OR TOOL UNLESS OTHERWISE REQUIRED ON PLANS.

DOWELS:

DOWELS WHEN INDICATED ON PLANS AS FOR CULVERT EXTENSIONS, SHALL BE EMBEDDED AT LEAST 12" INTO THE OLD CONCRETE AND GROUTED INTO PLACE WITH 1:2 CEMENT MORTAR.

ALLOWANCE FOR DEAD LOAD DEFLECTION, SETTLEMENT, ETC. IN CASTING SUPERSTRUCTURES:

BRIDGES SHALL BE BUILT ON THE GRADE OR VERTICAL CURVE SHOWN ON PLANS. SLABS, CURBS AND PARAPETS SHALL CONFORM TO THE GRADE OR CURVE.

ALL DIMENSIONS WHICH ARE GIVEN IN SECTION AND ARE AFFECTED BY DEAD LOAD DEFLECTIONS ARE DIMENSIONS AT CENTER LINE OF BEARING UNLESS OTHERWISE NOTED ON PLANS. IN SETTING FORMS FOR STEEL BEAM BRIDGES AND PRESTRESSED CONCRETE GIRDER BRIDGES, ADJUSTMENTS SHALL BE MADE DUE TO THE DEAD LOAD DEFLECTIONS FOR THE ELEVATIONS SHOWN. WHERE BLOCKS ARE SHOWN OVER BEAMS FOR BUILDING UP TO THE SLAB, THE VERTICAL DIMENSIONS OF THE BLOCKS SHALL BE ADJUSTED BETWEEN BEARINGS TO COMPENSATE FOR DEAD LOAD DEFLECTIONS, VERTICAL CURVE ORDINATE, AND ACTUAL BEAM CAMBER. WHERE BOTTOM OF SLAB IS IN LINE WITH BOTTOM OF TOP FLANGES, DEPTH OF SLAB BETWEEN BEARINGS SHALL BE ADJUSTED TO COMPENSATE FOR DEAD LOAD DEFLECTION, VERTICAL CURVE ORDINATE, AND ACTUAL BEAM CAMBER.

IN SETTING FALSEWORK AND FORMS FOR REINFORCED CONCRETE SPANS, AN ALLOWANCE SHALL BE MADE FOR DEAD LOAD DEFLECTIONS, SETTLEMENT OF FALSEWORK, AND PERMANENT CAMBER WHICH SHALL BE PROVIDED FOR IN ADDITION TO THE ELEVATIONS SHOWN. AFTER REMOVAL OF THE FALSEWORK, THE FINISHED STRUCTURES SHALL CONFORM TO THE PROFILE AND ELEVATIONS SHOWN ON THE PLANS AND CONSTRUCTION ELEVATIONS FURNISHED BY THE ENGINEER.

DETAILED DRAWINGS FOR FALSEWORK OR FORMS FOR BRIDGE SUPERSTRUCTURE AND ANY STRUCTURE OR PARTS OF A STRUCTURE AS NOTED ON THE PLANS SHALL BE SUBMITTED TO THE ENGINEER FOR APPROVAL BEFORE CONSTRUCTION OF THE FALSEWORK OR FORMS IS STARTED.

REINFORCING STEEL:

ALL REINFORCING STEEL SHALL BE DEFORMED. DIMENSIONS RELATIVE TO PLACEMENT OF REINFORCING ARE TO CENTERS OF BARS UNLESS OTHERWISE INDICATED IN THE PLANS. DIMENSIONS ON BAR DETAILS ARE TO CENTERS OF BARS OR ARE OUT TO OUT AS INDICATED ON PLANS.

WIRE BAR SUPPORTS SHALL BE PROVIDED FOR REINFORCING STEEL WHERE INDICATED ON THE PLANS. WHEN BAR SUPPORT PIECES ARE PLACED IN CONTINUOUS LINES, THEY SHALL BE SO PLACED THAT THE ENDS OF THE SUPPORTING WIRES SHALL BE LAPPED TO LOCK LEGS ON ADJOINING PIECES.

STRUCTURAL STEEL:

AT THE CONTRACTOR'S OPTION, HE MAY SUBSTITUTE ⅞" ∅ SHEAR STUDS FOR THE ¾" ∅ STUDS SPECIFIED ON THE PLANS. THIS SUBSTITUTION SHALL BE MADE AT THE RATE OF 3 - ⅞" ∅ STUDS FOR 4 - ¾" ∅ STUDS, AND STUD SPACING CHANGES SHALL BE MADE AS NECESSARY TO PROVIDE THE SAME EQUIVALENT NUMBER OF ⅞" ∅ STUDS ALONG THE BEAM AS SHOWN FOR ¾" ∅ STUDS BASED ON THE RATIO OF 3 - ⅞"∅ STUDS FOR 4 - ¾" ∅ STUDS. STUDS OF THE LENGTH SPECIFIED ON THE PLANS MUST BE PROVIDED. THE MAXIMUM SPACING SHALL BE 2'-0".

EXCEPT AT THE INTERIOR SUPPORTS OF CONTINUOUS BEAMS WHERE THE COVER PLATE IS IN CONTACT WITH BEARING PLATE, THE CONTRACTOR MAY, AT HIS OPTION, SUBSTITUTE FOR THE COVER PLATES DESIGNATED ON THE PLANS COVER PLATES OF THE EQUIVALENT AREA PROVIDED THESE PLATES ARE AT LEAST 5/16" IN THICKNESS AND DO NOT EXCEED A WIDTH EQUAL TO THE FLANGE WIDTH LESS 2" OR A THICKNESS EQUAL TO 2 TIMES THE FLANGE THICKNESS. THE SIZE OF FILLET WELDS SHALL CONFORM TO THE REQUIREMENTS OF THE CURRENT ANSI/AASHTO/AWS "BRIDGE WELDING CODE". ELECTROSLAG WELDING WILL NOT BE PERMITTED.

WITH THE SOLE EXCEPTION OF EDGES AT SURFACES WHICH BEAR ON OTHER SURFACES, ALL SHARP EDGES AND ENDS OF SHAPES AND PLATES SHALL BE SLIGHTLY ROUNDED BY SUITABLE MEANS TO A RADIUS OF APPROXIMATELY 1/16" OR EQUIVALENT FLAT SURFACE AT A SUITABLE ANGLE PRIOR TO PAINTING, GALVANIZING, OR METALLIZING.

HANDRAILS AND POSTS:

METAL STANDARDS AND FACES OF THE CONCRETE END POSTS FOR THE METAL RAIL SHALL BE SET NORMAL TO THE GRADE OF THE CURB, UNLESS OTHERWISE SHOWN ON PLANS. THE METAL RAIL AND TOPS OF CONCRETE POSTS USED WITH THE ALUMINUM RAIL SHALL BE BUILT PARALLEL TO THE GRADE OF THE CURB.

METAL HANDRAILS SHALL BE IN ACCORDANCE WITH THE PLANS. RAILS SHALL BE AS MANUFACTURED FOR BRIDGE RAILING. CASTINGS SHALL BE OF A UNIFORM APPEARANCE. FINS AND OTHER DEFORMATIONS RESULTING FROM CASTING OR OTHERWISE SHALL BE REMOVED IN A MANNER SO THAT A UNIFORM COLORING OF THE COMPLETED CASTING SHALL BE OBTAINED. CASTINGS WITH DISCOLORATIONS OR OF NON-UNIFORM COLORING WILL NOT BE ACCEPTED. CERTIFIED MILL REPORTS ARE REQUIRED FOR METAL RAILS AND POSTS.

SPECIAL NOTES:

GENERALLY, IN CASE OF DISCREPANCY, THIS STANDARD SHEET OF NOTES SHALL GOVERN OVER THE SPECIFICATIONS, BUT THE REMAINDER OF THE PLANS SHALL GOVERN OVER NOTES HEREON, AND SPECIAL PROVISIONS SHALL GOVERN OVER ALL. SEE SPECIFICATIONS ARTICLE 105-4.

PROJECT NO. 15BPR.164

BEAUFORT COUNTY

TERMINAL:

STATE OF NORTH CAROLINA
DEPARTMENT OF TRANSPORTATION
RALEIGH

STANDARD NOTES

REVISIONS						SHEET NO.
NO.	BY:	DATE:	NO.	BY:	DATE:	SN
1	--	--	3	--	--	TOTAL SHEETS
2	--	--	4	--	--	SN

DES BY: G. MYERS	DATE : 11/2025	DWG BY: B. PETERSON	DATE : 11/2025
DES CHK: D. KNICKERBOCKER	DATE : 11/2025	CHK BY: G. MYERS	DATE : 12/2025

HDR Engineering, Inc. of the Carolinas
555 Fayetteville St., Suite 900 Raleigh, N.C. 27601
N.C.B.E.L.S. License Number: F-0116

DOCUMENT NOT CONSIDERED FINAL UNLESS ALL SIGNATURES COMPLETED